Document Number:	GLM-QS-1700.1.14
Revision:	Revision A
Effective Date:	**7/19/2012**
Expiration Date:	7/19/2017

Glenn Safety Manual – Chapter 14

Shop Safety
w/Change 2 (9/30/2015)

Approved by: QS/Chief, Safety and Health Division

Distribution: BMS Library

NASA - Glenn Research Center
Cleveland, OH 44135

Change Record

Rev.	Effective Date	Expiration Date	GRC25, Change Request #	Description
A	7/19/2012	7/19/2017	99	Insertion of Verification Boxes in the Requirements section.
Change 1	4/14/2014	7/19/2017	N/A	Administrative change to add front cover and change history log to comply with NPR 1400.1. Deleted "()" and added "The GRC shall follow the requirements of" in Section 6.1 Administrative Policies and Procedures
Change 2	9/30/2015	7/19/2017	N/A	Administrative change to remove hyperlinks.

***Include all information for each revision. Do not remove old revision data. Add new rows to table when space runs out by pressing the tab key in the last row, far right column.*

Contents

1.0 PURPOSE....6
2.0 APPLICABILITY....6
3.0 BACKGROUND....6
4.0 POLICY....6
5.0 RESPONSIBILITIES....7
5.1 Safety and Health Division Professionals....7
5.2 Supervisors....7
5.3 Employees....7
6.0 REQUIREMENTS....7
6.1 Administrative Policies and Procedures....7
6.1.1 Visitor Information for Machine Shops....7
6.1.2 General Shop Safety Procedures....8
6.2 Policies and Procedures for Environmental Compliance....9
6.2.1 Chemical Storage, Dispensing, and Disposal....9
6.2.2 Waste Management System....9
6.3 Policies and Procedures for Hot Work (Welding, Cutting, etc.)....10
6.3.1 Welding and Cutting....10
6.3.2 Soldering....11
6.4 Policies and Procedures for Compressed Gas Cylinders....11
6.4.1 Cylinder Storage Area....11
6.4.2 Cylinder Use....12
6.4.3 Empty Cylinders....12
6.4.4 Moving Cylinders....12
6.5 Policies and Procedures for Ladders and Scaffolds....13
6.5.1 Ladders—General....13
6.5.2 Fixed Ladders....14
6.5.3 Portable Ladders....15
6.5.4 Stepladders....16
6.5.5 Rolling Scaffolds....18
6.5.6 Scaffold Decks....19
6.6 Policies and Procedures for Metal Fabrication Equipment....20
6.6.1 Bench and Pedestal Grinders....20
6.6.2 Handling and Storing Bonded Abrasive Wheels....22
6.6.3 Beveling Machines....24
6.6.4 Fixture Removal or Installation....24
6.6.5 Mechanical Presses....25
6.6.6 Press Brakes....26
6.6.7 Metal Shear....29
6.6.8 Waterknives....29
6.7 Policies and Procedures for Metal-Working Machines....30
6.7.1 Metal-Working Machines—General....30
6.7.2 Drill Presses....31
6.7.3 Lathes....31
6.7.4 Milling Machines....32
6.8 Policies and Procedures for Non-powered Hand Tools....33
6.8.1 General Hand Tools....33
6.8.2 Hammers....34
6.8.3 Nonpipe Wrenches....36
6.8.4 Pipe Tools—Wrenches, Cutters, Reamers, and Threaders....37
6.8.5 Pliers and Wire Cutters....39
6.8.6 Screwdrivers....40
6.8.7 Snips....41

6.8.8 Struck Tools—Chisels, Punches, Nail Sets, and Wedges 42
6.8.9 Vises 44
6.8.10 Torque Wrenches 45
6.9 Policies and Procedures for Powered Hand Tools 46
6.9.1 Electrical Tools—General 47
6.9.2 Pneumatic Tools 49
6.9.3 Drills 50
6.9.4 Hand Grinders 52
6.9.5 Magnetic Drills 54
6.9.6 Saws 55
6.9.7 Surface Grinders 59
6.10 Policies and Procedures for Spraying Paint or Combustible Liquids 60
6.10.1 Ventilated Spray Hoods 60
6.10.2 Ventilated Spray Booths 60
6.10.3 Spraying Outside of a Hood or Booth 61
7.0 RECORDS 61
8.0 REFERENCES 61
APPENDIX A .—DEFINITIONS AND ACRONYMS 63

List of Tables

TABLE 6.1.—TYPES OF WELDING LENSES 10

List of Figures

Figure 6.1.—Hazardous Materials Identification System label. 9
Figure 6.2.—Proper cylinder storage. 12
Figure 6.3.—Cylinder trolleys. 13
Figure 6.4—Fixed ladder. 14
Figure 6.5.—Ladder stay in use. 15
Figure 6.6.—Three points of contact. 16
Figure 6.7.—Lock spreader. 17
Figure 6.8.—Keep your knees below the top step. 17
Figure 6.9—Components to inspect on a stepladder. 17
Figure 6.10—Rolling scaffold. 18
Figure 6.11—Framed scaffold. 18
Figure 6.12—Securing scaffold planking, option 1. 19
Figure 6.13.—Securing scaffold planking, option 2. 19
Figure 6.14.—Deformations not permitted in scaffold planking. 20
Figure 6.15.—Proper grinder setup. 21
Figure 6.16.—Dress grinding wheels routinely to keep them sharp and effective. 21
Figure 6.17.—Ring test tapping locations. 22
Figure 6.18.—Anatomy of a pedestal grinder. 23
Figure 6.19.—Tightening sequence. 24
Figure 6.20.—Using C-clamps. 25
Figure 6.21.—The difference between the proper and improper power flow through a standard precision-ground tooling set is obvious. 26
Figure 6.22.—European (a) and standard American (b) press brake tooling are configured differently. American tooling is reversible from a power flow point of view but can lose its center on the die. (c) European tooling performs in the opposite way—reversibility on centers, but mishaps in power flow that are possible if an improper setup is used. 27
Figure 6.23.—Open height on a press brake should be set in a way that ensures the safety of the operator's fingers. 28
Figure 6.24.—Reaching between a punch and die set is one of the most foolish things a press brake operator can do. 28

Figure 6.25.—Holding the workpiece over the top of previous bend is a no-no, as is leaning over a workpiece that is about to be bent, unless you enjoy being slapped in the face by sheet metal. 28
Figure 6.26.—Hammers, punches, chisels, and other tools with mushroomed heads should be discarded and replaced....35
Figure 6.27.—Strike the hammer squarely. 35
Figure 6.28.—Hold the hammer with your wrist straight and hand firmly wrapped around the handle. 35
Figure 6.29.—Do not strike with the side or cheek of the hammer. 35
Figure 6.30.—Do not strike a wrench with a hammer or other object to gain more force. 37
Figure 6.31.—Allowing a gap between the back of the hook jaw and the pipe produces maximum gripping force. 37
Figure 6.32.—Always pull the wrench towards you. 38
Figure 6.33.—Choose pliers that have a grip span of 2.5 to 3.5 in. 39
Figure 6.34.—Offset screwdrivers can be used to get into close quarters. 40
Figure 6.35.—Pistol grip and ratchet spreaders can give better leverage. 41
Figure 6.36.—Select the right snips for the job. 42
Figure 6.37.—Hammers, punches, chisels, and other tools with mushroomed heads should be discarded and replaced....43
Figure 6.38.—Tools are available to protect hands. 44
Figure 6.39.—The chisel angle must be 70° for hard metals and 60° for soft metals. 44
Figure 6.40.—A properly mounted vise. 45
Figure 6.41.—Only use dead-front plugs. 47
Figure 6.42.—Knots can cause short circuits and shock. 49
Figure 6.43.—Tool balancers can greatly reduce fatigue. 49
Figure 6.44.—Hold air line away from yourself and others. 50
Figure 6.45.—Use quick disconnects of a pressure-release type rather than a disengagement type. 50
Figure 6.46.—Compressed air used for cleaning purposes must be reduced to less than 30 psi. 50
Figure 6.47.—Ensure that bits and attachments are properly seated and tightened in the chuck. 51
Figure 6.48.—Drill components. 52
Figure 6.49.—Straight grinder wheel. 53
Figure 6.50.—Cup grinder wheel. 53
Figure 6.51.—Cone grinder wheel. 53
Figure 6.52.—Use suitable adapters to mount depressed center wheels to prevent the wheel from breaking apart. 54
Figure 6.53.—Circular saw....56
Figure 6.54.—Use a wedge or guide clamped to the stock to rip lumber with a circular saw. 57
Figure 6.55.—Starting an outside cut. 58
Figure 6.56.—Starting an inside cut. 59

Chapter 14—Shop Safety

NOTE: *The current version of this chapter is maintained and approved by the Safety and Health Division (SHeD). The last revision date of this chapter was June 2010. The current version is located on the Glenn Research Center intranet within the BMS Library. Approved by Chief of Safety and Health Division.*

1.0 PURPOSE

This chapter describes the policies and procedures for working safely in machine and fabrication shops as well as for working with typical machining and metal-forming equipment and tools. This document is intended to be a compilation of several requirements and standards from the Occupational Safety and Health Administration (OSHA) and NASA. It provides practical implementation guidance based on those documents. These policies and procedures protect employees and visitors working in or near shop areas as well as protect hardware and equipment.

This document does not replace safety programs specified by OSHA or NASA; it only acts as a collection of primary information and the practical application of that information.

2.0 APPLICABILITY

The provisions of this chapter are applicable to civil servants, support service contractors, and construction contractors at the NASA Glenn Research Center's (GRC) Lewis Field and Plum Brook Station.

3.0 BACKGROUND

The majority of the jobs in the manufacturing sector are labor intensive. Workers are engaged in the mechanical, physical, or chemical transformation of materials, substances, or components into products. Manufacturing facilities characteristically use power-driven machines and material-handling equipment.

Workers in the manufacturing fields are at risk for illness and injuries because of long hours; changing shifts; contact with machinery and equipment; slips and falls; physical exertion and repetitive motions causing musculoskeletal disorders; hazardous exposure to toxic substances such as heavy metals, organic solvents, dust, isocyanates, chemicals, aerosols, nanoparticles, and carbon monoxide; explosions and structural failures; noise; ototoxicants; and stress.

The Glenn Shop Safety Program establishes the policies, procedures, and responsibilities necessary for the safe operation of machining and fabrication shops.

4.0 POLICY

GRC's safety, health, and environmental professionals shall provide support to Center personnel and operations to assist them in meeting mission goals safely and healthfully. It is GRC policy for all GRC personnel to manage and conduct their operations in such a manner as to eliminate or minimize all potential hazards and to avoid accidents involving injury to personnel, damage to property, or loss of research operating time and effectiveness. In addition, it is GRC policy to eliminate pollution to the atmosphere, ground water, or land and to minimize potential exposure to hazardous materials.

Shop operations, design, fabrication, and assembly shall follow all applicable Federal, State, and local laws; NASA safety, health, and environmental standards and policies; and all recognized professional organizations' "best practices." Although there is no OSHA or NASA requirement for a shop safety program, this document is intended to act as a guidance document and a compilation of requirements including machine guarding and lockout/tagout.

5.0 RESPONSIBILITIES

5.1 Safety and Health Division Professionals

Safety and Health Division (SHeD) professionals are responsible for

- Providing safety and health input on regulatory and best-practice requirements and support shop activities
- Assisting in developing solutions to challenges that provide minimal impact to budget and schedule while meeting requirements
- Working with personnel, projects, and organizations in a team format to meet mission goals

5.2 Supervisors

Supervisors are responsible for

- Supporting SHeD and shop employees in implementing safety and health rules and regulations
- Ensuring that the safety and health policies and procedures established for shop areas and operations are being followed
- Immediately correcting recognized unsafe conditions affecting personnel and facilities under their jurisdiction
- Securing funding to ensure that shop facilities and equipment meet safety and health standards
- Ensuring that all incidents and injuries are reported in NASA's Incident Reporting Information System (IRIS)

5.3 Employees

Employees are responsible for

- Following all safety rules, regulations, and practices
- Maintaining training requirements and only operating equipment that they are qualified to operate
- Informing management of unsafe conditions that need to be addressed
- Immediately reporting all incidents and injuries to their supervisors

6.0 REQUIREMENTS

6.1 Administrative Policies and Procedures

The GRC shall follow the requirements of 29 CFR 1910 Subpart I Personal Protective Equipment, 29 CFR 1910 Subpart D Walking-Working Surfaces29 USC 654 (a)…General Duty Clause.

6.1.1 Visitor Information for Machine Shops

We welcome visitors to our shop facilities, and we welcome our visitors to look around and ask questions. We want our visitors to have a safe and enjoyable visit, so we have a few safety procedures that we ask our visitors to follow:

- Visitors should arrive to the facility prepared to walk through a working machining and fabrication environment. This means ankle-length slacks or pants. We respectfully ask that you not wear skirts, shorts, or capris. Please wear closed-toed and closed-heeled shoes. Clogs, sandals, and high heels are not appropriate foot attire.
- Visitors may be asked to wear hard hats, safety glasses, and hearing protection. These items will be provided to visitors by the facility. Visitors must wear these items throughout the duration of their visit.
- Visitors must stay with their escort.

- Visitors are welcome to look all they like but will need to refrain from touching. Some pieces may contain sharp edges or may be hot from welding processes.

6.1.2 General Shop Safety Procedures

6.1.2.1 Securing the Area

- Shop areas must be controlled to prevent unqualified and unauthorized personnel from entering and using equipment.
- Proper signage must be displayed alerting individuals to the hazards and personal protective equipment requirements in the shop.
- Walkways must be marked and used at all times. Walkways must be consistent with emergency evacuation routes and provide visitors a safe path through the shop area.

6.1.2.2 Safety Attire

- Safety glasses with side shields are required throughout all shop areas.
- Safety shoes are required when outside designated walkways.
- Inside walkways, closed-toed and closed-heeled shoes are required.
- Loose clothing, neckties, scarves, and other loose items must not be worn when outside of the designated walkways. Roll sleeves above the elbow to prevent them from being caught in revolving parts.
- Long hair must be secured when anyone is near machinery.
- Loose gloves, rings, watches, necklaces, lanyards, and bracelets must not be worn near machinery.
- Hearing protection must be worn when workers are grinding, torch cutting, operating a water knife, a brake, and other tools where hearing protection is indicated for use.

6.1.2.3 Equipment Inspection

- Always inspect equipment before using.
- Check and adjust all safety devices before each job.
- Ensure that the guards are in position and in good working condition before operating.
- Ensure that all stationary equipment is anchored securely to the floor.
- Ensure that all machines have a start/stop button within easy reach of the operator.
- Have any alterations or major repairs made by a qualified machine repairman.

6.1.2.4 Housekeeping

- Ensure that the area around the machine is free of clutter, debris, and oil to prevent slip and trip hazards.
- Ensure that there is enough room around the machine to do the job safely.
- Ensure that the working surfaces are clean of scraps, tools, and materials.

6.1.2.5 Equipment Operation

Only trained and qualified operators may use equipment. All others must work under the supervision of a journeyman-qualified operator. A journeyman-qualified operator may train others to use a piece of equipment and verify that the person is qualified to operate the equipment using the NASA Glenn Research On-the-Job Training (OJT) form (NASA C–40). The form must clearly state the training topics that were discussed and provide verification that the individual understands how to use the equipment accurately and safely.

For safe operation,

- Keep rags, brushes, hands, and other tools away from moving machine parts.
- Avoid awkward operations and hand positions. A sudden slip could cause your hand to move into the cutting tool or blade or contribute to a fall.
- Ensure that machines that are running are attended at all times.
- Use a vacuum, brush, or rake to remove cuttings. Do not handle cuttings by hand.

6.1.2.6 Buddy System

All shops shall follow the "no-one alone system." As defined in The Glenn Buddy System, Chapter 22 (Section 6.1.4) of the Glenn Safety Manual, the "no-one alone system involves situations in which two or more persons, not necessarily having the same skills or training, are working in the same area and checking with reasonable frequency on the continuing well-being of each other." Under this system, at least two individuals must be present in the shop together within line of sight and hearing.

> 6.1 Verification of compliance with these requirements is done by SHeD during periodic evaluation and assessments.

6.2 Policies and Procedures for Environmental Compliance

(29 CFR 1910 Subpart H Hazardous Materials, 29 USC 654 (a)…General Duty Clause)

6.2.1 Chemical Storage, Dispensing, and Disposal

- Chemicals shall be stored in appropriate chemical storage cabinets.
- Dispensing bottles are not permitted to be stored on benches, on roll-around toolboxes, or on equipment.
- All chemicals must be returned before the end of the shift to the appropriate safety cabinet.
- All dispensing bottles must have a legible Hazardous Materials Identification System label affixed to them.

Figure 6.1.—Hazardous Materials Identification System label.

6.2.2 Waste Management System

- All employees shall receive annual training in the appropriate Waste Management Program procedures.
- Used solvent and oil rags must be placed in an oil or solvent rag disposal container at the end of each shift. A solvent and an oily rag disposal container will be provided in each shop area. No items other than solvent and oily rags may be disposed of in these containers. These containers must be emptied nightly into the oily and solvent rag collection drum.
- Sanding disk and grinding wheels must be collected in a separate collection drum. All grinding wheels, sanding wheels, disks, and belts must go into this container. No other waste items may be discarded in this container.

- A scrap metal container should be located within the shop area. These cans must be emptied periodically into the metal dumpster located outside the building to prevent them from overflowing. All scrap metal will be thrown into these containers. Only scrap metal may be discarded into these containers.
- All unwanted chemicals and empty containers need to be discarded through the waste management system. The user must fill out a NASA C–260a form so that Waste Management can come and pick up the container.

6.2 Verification of compliance with these requirements is done by SHeD during periodic evaluation and assessments.

6.3 Policies and Procedures for Hot Work (Welding, Cutting, etc.)

(29 CFR 1910 Subpart G, Occupational Health and Environmental Control, 29 CFR 1910 Subpart I Personal Protective Equipment, 29 CFR 1910 Subpart P Hand and Portable Powered Tools and Other Hand-Held Equipment, 29 CFR 1910 Subpart Q Welding, Cutting, and Brazing, 29 USC 654 (a)…General Duty Clause)

A checklist for conducting a walkthrough and inspection of a hot work setup follows:

- Ensure that a valid Hot Work Authorization Permit is present and complete the Hot Work Pre-Operations Checklist (NASA C–7a and C–7b).
- Inspect the area for combustible hazards prior to performing hot work.
- Inspect electrical cords and hoses to ensure that they are in a safe condition.
- Connect electrical cords and hoses so that they do not create a trip hazard. If a cord or hose must extend into a pedestrian walkway, take measures to ensure that it is not a trip hazard.
- Ensure that a dedicated fire extinguisher is in the welding/hot work station or on the welding machine. The fire extinguisher cannot be taken from the facility wall.
- Ensure that fire blankets are in the hot work area.
- Ensure that a metal splatter pan is the area for cutting operations.
- Use welding curtains to protect workers in the area from sparks and radiant energy emitted from welding and grinding processes.
- Use a respirator with high-efficiency particulate air (HEPA) filtration during welding and grinding unless otherwise stated by an industrial hygienist.
- Use local exhaust ventilation whenever available and when feasible.

6.3.1 Welding and Cutting

6.3.1.1 Personal Protective Equipment for Welding and Cutting

Don a welding jacket, welding gloves, hearing protection, and a respirator with a HEPA filter. Use welding lenses with the following shade levels:

TABLE 6.1.—TYPES OF WELDING LENSES

Welding lenses	Current, A	Shade level
Shielded metal arc welding	160 to 250	10
Shielded metal arc welding	50 to 500	11
Gas metal arc welding (flux core)	>60	10
Gas tungsten arc welding	50 to 150	8
Gas tungsten arc welding	150 to 500	10

Plasma cutting	300 to 400	9
Plasma cutting	400 to 800	10
Carbon arc gauging	<500	11

- Use welding blankets to protect equipment in the welding area.
- Use welding curtains and shields to protect nearby workers from welding flash.
- Disconnect the electrical cord after use and store it off the floor when finished welding.
- At a minimum, don a welding jacket when performing cutting operations and overhead welding; however, a leather welding jacket is more protective in these operations.

6.3.1.2 Mechanized Welding and Cutting Processes

- Ensure that the track is balanced and secured.
- Ensure that the mechanized welding machine is safely secured to the track.
- Ensure that the mechanized welding machine operator has a positive indication of fall hazards.
- Ensure that the area around the weld zone is free of trip and slip hazards and obstructions to permit the operator free and safe travel with the welder.
- When welding or cutting, do not wear loose clothing, gloves, or jewelry (including rings); and secure long hair.

6.3.1.3 Cutting Processes

- A fire watch, or safety monitor, must be present the entire time that carbon arc gauging or plasma cutting is taking place as well as for at least 30 min after the hot work is completed (refer to NASA C–7a and C–7b for the required fire watch duration).
- Metal splash pans must be placed under the work zone, and an enclosed barricade must be set up around the work zone. (Fire blankets may ignite.)
- Local exhaust ventilation must be used near the hot work zone during plasma cutting and carbon arc gauging.

6.3.2 Soldering

Soldering flux has the potential to emit formaldehyde. Soldering practices should be done in the presence of a desktop fume extraction device or inside a ventilated hood whenever possible. It is important that employees wash their hands thoroughly after soldering.

6.3 Verification of compliance with these requirements is done by SHeD during periodic evaluation and assessments.

6.4 Policies and Procedures for Compressed Gas Cylinders

(29 CFR 1910 Subpart Q Welding, Cutting, and Brazing, 29 USC 654 (a)…General Duty Clause)

6.4.1 Cylinder Storage Area

- Store cylinders in a clearly identified, dry, well-ventilated storage area away from doorways, walkways, elevators, and stairs.
- Post “no smoking” signs in the area.
- Store cylinders in the upright position and secure with a chain.

- Secure the protective caps.
- Ensure that the area is well ventilated.
- Protect cylinders from contact with the ground, ice, snow, water, salt, corrosion, and high temperatures.
- Store oxygen and fuel gases separately. Indoors, separate oxygen from fuel gas cylinders by at least 20 ft or by a wall at least 1.5 m (5 ft) high with a minimum half-hour fire resistance. Oxyacetylene cylinders may be placed on an undivided cart when in use but cannot be stored on the cart.

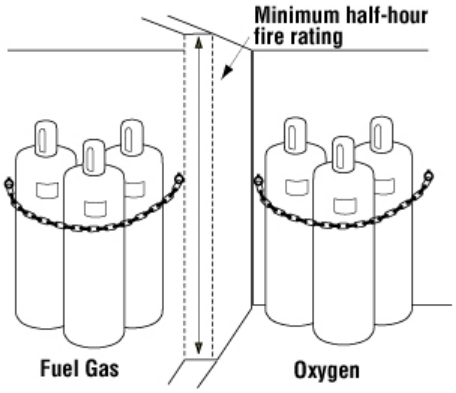

Figure 6.2.—Proper cylinder storage.

6.4.2 Cylinder Use

- Do not fasten cylinders to a work table or to structures where they could become part of an electrical circuit.
- Before attaching the regulator, “crack” a secured cylinder (except hydrogen cylinders) by opening the valve slightly then closing it immediately to blow out dust or dirt from the valve outlet. Use two hands on the valve and stand at the side of the valve—never stand directly in front of or behind the valve outlet.
- Do not crack fuel gases near ignition sources.
- Never crack hydrogen cylinders since released compressed hydrogen may ignite by itself.

6.4.3 Empty Cylinders

- Mark or label an empty cylinder as an “empty cylinder” and store it away from full cylinders.
- Return empty cylinders to the “empties storage area,” where Logistics will pick them up and take them to Building 215 to schedule return to the vendor.
- Remove regulators when not in use and store these away from grease and oil. Put protective caps on the fittings when in storage.
- Keep cylinders and fittings from becoming contaminated with oil, grease, or dust.
- Do not use a cylinder that is not identified or if the label is not legible. The colors of industrial gas cylinders are not standardized.

6.4.4 Moving Cylinders

- Remove the regulator and replace the valve protection cap before moving a cylinder.
- Move cylinders with appropriate trolleys. Cylinders must be secured to the trolley when moving. Use proper lifting cradles.

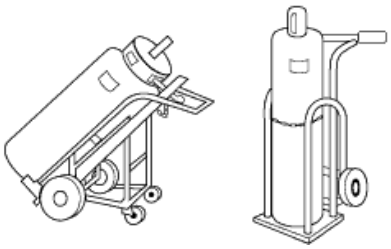

Figure 6.3.—Cylinder trolleys.

- Call Center Dispatch, at 216–433–2088 from Lewis Field or at 419–621–3222 from Plum Brook Station, to remove leaking cylinders. Dispatch will contact Logistics to remove the cylinder.
- Do not lift a cylinder by the valve cap, sling it with ropes or chains, or lift it with electromagnets.
- Do not drag, slide, or drop cylinders. They may be rolled for short distances on their base.
- Never place cylinders on their sides as rollers to move equipment.
- Do not lay acetylene cylinders on their sides. If an acetylene tank has accidentally been left on its side, set it upright for at least 1 hour before it is used.

6.4 Verification of compliance with these requirements is done by SHeD during periodic evaluation and assessments.

6.5 Policies and Procedures for Ladders and Scaffolds

(29 USC 654 (a)…General Duty Clause, 29 CFR 1910 Subpart D Walking-Working Surfaces)

6.5.1 Ladders—General

6.5.1.1 Ladder Inspection

Before each use, check for

- Missing or loose steps or rungs (They are loose if you can move them by hand.)
- Damaged or worn nonslip feet
- Loose nails, screws, bolts, or nuts
- Loose or faulty spreaders, locks, and other metal parts in poor repair
- Rot, decay, or warped rails in wooden ladders
- Cracks and exposed fiberglass in fiberglass ladders
- Cracked, split, worn, or broken rails, braces, steps, or rungs
- Sharp edges on rails and rungs
- Rough or splintered surfaces
- Corrosion, rust, oxidization, and excessive wear, especially on treads
- Twisted or distorted rails (Check ladders for distortion by sighting along the rails. Using a twisted or bowed ladder is hazardous.)
- Missing identification labels

6.5.1.2 Stepladders

Check for

- Wobble
- Loose or bent hinges and hinge spreaders
- Broken stop on a hinge spreader

6.5.1.3 Extension Ladders

Check for

- Loose, broken, or missing extension locks
- Defective locks that do not seat properly when ladder is extended
- Sufficient lubrication of working parts
- Defective cords, chains, and ropes
- Missing or defective pads or sleeves

6.5.1.4 General Care and Maintenance

- Red tag any defective ladders and take them out of service.
- Clean fiberglass ladders every three months.
- Protect wooden ladders with a clear sealer or wood preservative.
- Replace worn or frayed ropes on extension ladders.

6.5.2 Fixed Ladders

6.5.2.1 Fixed Ladder Inspection

Before each use, check for

- Loose, worn, and damaged rungs or side rails
- Damaged or corroded cage
- Corroded guard, bolts, or rivet heads
- Damaged or corroded handrails or brackets on platforms
- Broken or loose anchorages
- Weakened or damaged rungs on brick or concrete slabs
- Defects in climbing devices, including loose or damaged carrier rails or ropes
- Slippery surfaces from oil and ice
- Clutter obstructing the base of the ladder or platform

6.5.2.2 Fixed Ladders Use

- Wait until the other person has exited before ascending or descending.
- Maintain three-point contact by keeping two hands and one foot, or two feet and one hand on a ladder always.

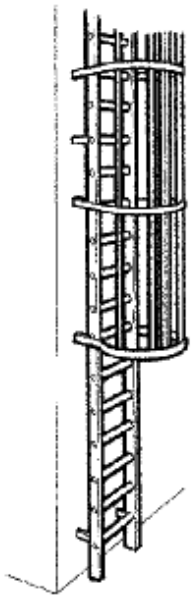

Figure 6.4—Fixed ladder.

- Face the ladder and use both hands to grip the rungs firmly.
- Place feet firmly on each rung.
- Wear footwear with heels. Ensure that footwear is in good condition.
- Clean muddy or slippery boot soles before mounting a ladder.
- Raise or lower tools and materials using a handline. Do not carry tools or materials in your hand while climbing. Carry small tools in a tool pouch.
- Check footing before descending a ladder.

6.5.3 Portable Ladders

6.5.3.1 Portable Ladder Use

- Inspect the ladder before and after each use (see Section 6.5.1.1).
- Get help when handling a heavy or long ladder.
- Keep ladders away from electrical wires.
- Tie off ladders at the top and secure at the bottom to prevent them from slipping. Rest the top of the ladder against a solid surface that can withstand the load. Attach a ladder stay across the back of a ladder if a surface cannot stand the load. Extend the stay across a window for firm support against building walls or a window frame.

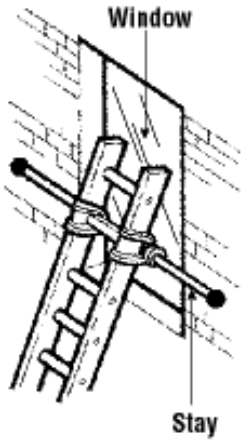

Figure 6.5.—Ladder stay in use.

- Set up barricades and warning signs when using a ladder in a doorway or passageway.
- Before mounting a ladder, clean your boot soles if they are muddy or slippery.
- Avoid climbing with wet soles. Ensure that footwear is in good condition.
- Face the ladder when going up or down and when working from it.
- Keep the center of your body within the side rails.
- Ladders may not be used in a horizontal position as a scaffold plank or runway.
- Hoist materials or attach tools to a belt instead of carrying them by hand.
- Do not work from the top three rungs of a ladder. The higher a person goes on a ladder, the greater the possibility that the ladder will slip out at the base.

- Wooden ladders may not be painted. Defects may be hidden by the paint. Wood preservatives or clear coatings may be used.

6.5.3.2 Portable Ladder Setup

- Place the ladder feet one-fourth of the ladder's working length away from the base of the structure (e.g., for every 4 ft high, the base of the ladder will need to be out 1 ft horizontally from the support point).
- Extend the ladder at least 3 ft above the landing platform.
- Place the ladder on a firm, level footing. Use a ladder with slip-resistant feet or secure blocking, or have someone hold the ladder.
- Rest both side rails on the top support and secure the ladder to prevent slipping.
- Check for overhead electrical wires or other overhead obstructions before setting up a ladder.
- Clear debris, tools, and other objects from the area around the base and top of the ladder.

6.5.3.3 Climbing Portable Ladders

- Tie off yourself with a safety harness when working with both hands.
- Ensure that only one person is on a single-width ladder.
- Maintain three-point contact by keeping two hands and one foot, or two feet and one hand, on the ladder at all times.

Figure 6.6.—Three points of contact.

- Grasp the rungs when climbing a ladder, not the side rails. If your foot slips on a ladder, holding onto the rungs is easier than holding onto the side rails.
- Wear protective footwear with slip-resistant soles and heels.

6.5.4 Stepladders

6.5.4.1 Stepladder Selection

Use a stepladder that is about 1 m (3 ft) shorter than the highest point you have to reach. This gives a wider, more stable base and places shelf at a convenient working height.

6.5.4.2 Stepladder Setup

- Open the stepladder spreaders and shelf fully. Do not climb a stepladder that is leaning against a wall. Use a straight ladder instead.
- Do not use stepladders on slippery surfaces.

- Set the ladder up on solid surfaces. Do not use stepladders on soft ground where one leg may sink farther into the ground than others.
- Ladders shall not be placed on boxes, unstable bases, or on scaffolds to gain additional height.
- Check stability. Ensure that all ladder feet are on a firm, level, and nonslippery surface.
- Place a stepladder at right angles to the work, with either the front or back of the steps facing the work.
- Keep the stepladder close to the work.
- Avoid pushing or pulling stepladders from the side. Repeated sideways movement can make ladders wobbly since they are weaker or less stable in those directions.

Figure 6.7.—Lock spreader.

6.5.4.3 Stepladder Use

- Face the stepladder when climbing up or down. Keep your body centered between the side rails. You have climbed too high if your knees are above the top of the stepladder or if you cannot maintain a handhold on the ladder.
- Maintain a firm grip. Use both hands when climbing.
- Move a stepladder when needed so that you are working within the width of the rails.
- Stepladders may not be used as a brace or as a support for a work platform or plank.

Figure 6.8.—Keep your knees below the top step.

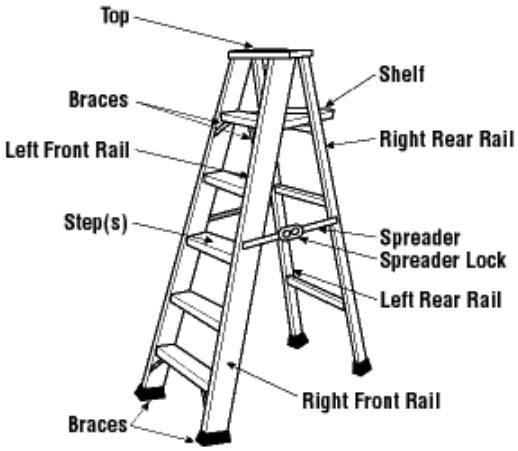

Figure 6.9—Components to inspect on a stepladder.

6.5.5 Rolling Scaffolds

6.5.5.1 Rolling Scaffold Setup

- Assemble the rolling scaffold according to manufacturer's instructions.
- Ensure that the surface on which the scaffold will be moved is level and without holes or obstructions.
- Brace all rolling scaffolds horizontally and diagonally.
- Cleat or secure all planks.
- Prevent joints from separating with a locking mechanism.
- Secure access ladders.
- Ensure that each wheel or castor is equipped with brakes to prevent rolling and swiveling.
- Lock the caster brakes before climbing onto the scaffold.
- Secure or remove all material, equipment, and personnel from platform before moving it.
- Push toward the base when moving the scaffold.
- Install outriggers as directed by the manufacturer.
- Install guardrails. Ensure that the top rail is 30 in. above the platform.
- Toeboards are required when the work platform is over 10 ft high.

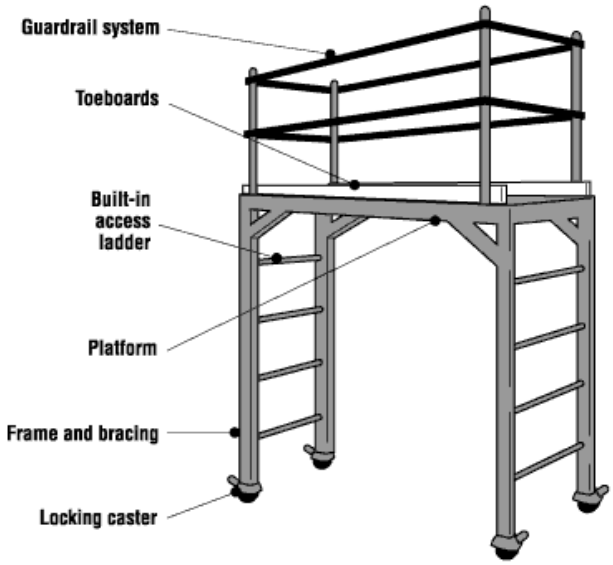

Figure 6.10—Rolling scaffold.

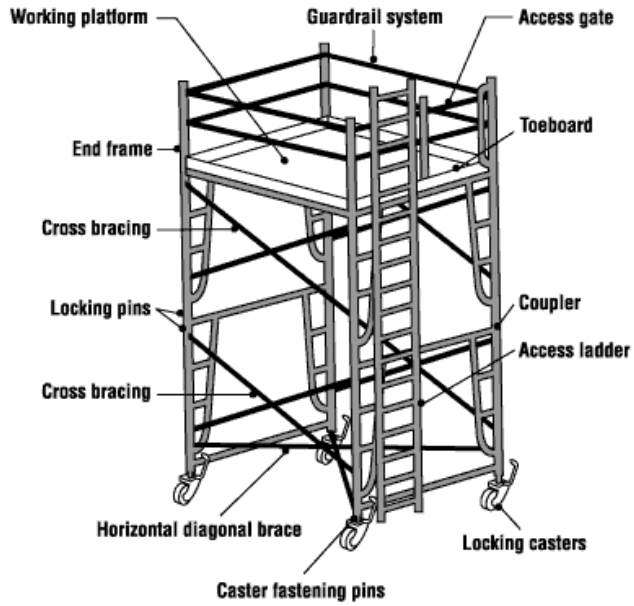

Figure 6.11—Framed scaffold.

6.5.5.2 Rolling Scaffold Use

- Exit the scaffold before it is moved.
- Do not extend adjusting screws more than the manufacturer recommends.
- Do not allow the working platform height to exceed three times the base width, unless it is guyed and equipped with outriggers or otherwise stabilized.

- Protect all planked or working levels with proper guardrails, midrails, and toeboards along all open sides and at the ends of scaffold platforms.

6.5.6 Scaffold Decks

6.5.6.1 Securing Scaffold Planks

- Only cleat planks at the ends to prevent lengthwise movement. Wiring down planks can also prevent movement, provided the wire does not create a tripping hazard.
- Where planks overlap, rest the cleated end on the support.
- To prevent splitting, do not use cleats elsewhere on the plank.
- Ensure that adjoining planks are of uniform thickness for an even platform.
- Lay planks side by side across the full width of the scaffold.
- Check scaffold planks for large knots, worm holes, steeply sloping grain at the edges, spike knots, and splits. Splits that are wider than 3/8 in. lengthwise and closer than 3 in. to the edge of the plank or lengthwise longer than one-fourth the length of the plank are not acceptable. Discard immediately any planks showing these defects or others.
- Regularly check hooks and hardware of prefabricated platform units for looseness, distortion, and cracks. Damage can occur if the platforms are dropped or thrown.
- Clean ice, snow, oil, and grease off planks. Platform decks must be slip resistant and may not accumulate water.
- Inspect planks on a regular basis while on the scaffold. Weather, rot, and general use can deteriorate the planks.
- Do not jump on the planks to test their strength. Jumping can cause undetectable damage.

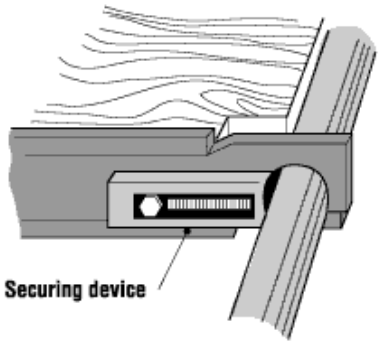

Figure 6.12—Securing scaffold planking, option 1.

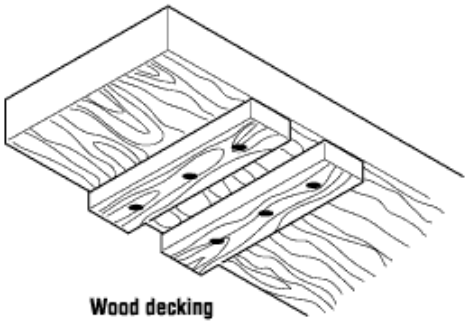

Figure 6.13.—Securing scaffold planking, option 2.

6.5.6.2 Minimum Scaffold Decking Requirements

- Ensure that the deck material is consistent with OSHA 29 Code of Federal Regulations (CFR) 1910.28 requirements.
- Ensure that all working platforms are at least 18 in. wide.
- Use a minimum of 2- by 9-in. number 1 grade spruce-pine-fir planking or better.
- Overlap or extend planking 6 to 12 in. and cleat at each end to prevent it from slipping and blowing off.

- Support planks at intervals not exceeding 10 ft for light work and 7 ft for heavy work (bricklaying or masonry).
- Toeboards (3 1/2 in. high) are required when the working surface is over 10 ft high.

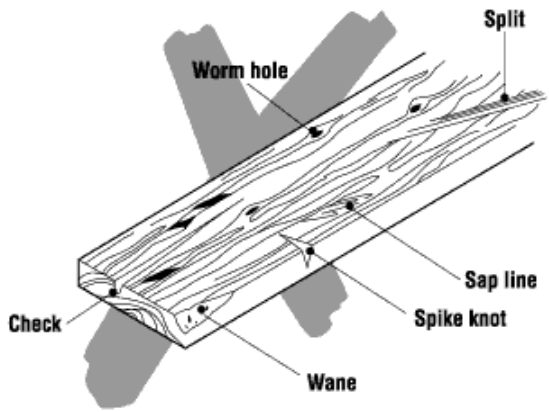

Figure 6.14.—Deformations not permitted in scaffold planking.

6.5 Verification of compliance with these requirements is done by SHeD during periodic evaluation and assessments.

6.6 Policies and Procedures for Metal Fabrication Equipment

(29 CFR 1910 Subpart O Machinery and Machine Guarding, 29 CFR 1910 Subpart P Hand and Portable Powered Tools and Other Hand-Held Equipment, 29 USC 654 (a)…General Duty Clause)

6.6.1 Bench and Pedestal Grinders

6.6.1.1 Bench and Pedestal Grinder Inspection

- Ensure that the pedestal and bench grinders are securely fastened.
- Ensure that all the guards are in place and secure before using a grinder.
- Ensure that the tool rest is adjusted to within 3 mm (1/8 in.) of the wheels. The work rest height must be on the horizontal center line of the machine spindle.
- Maintain 6-mm (1/4-in.) wheel exposure with a tongue guard or a movable guard.
- Ensure that the appropriate wheel is in the grinder for the workpiece and the work. Wheels are made only for grinding certain items. Rough forgings may not be ground on a small precision grinding wheel. Wood, plastics, and non-iron metals cannot be ground with an ordinary wheel.
- Ensure that the grinder speed does not exceed the operating speed marked on the wheel.
- Visually inspect the wheels for possible damage before mounting.

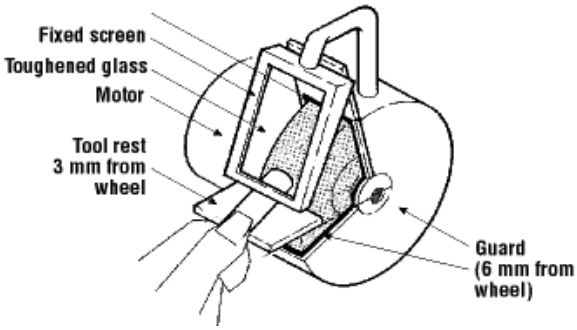

Figure 6.15.—Proper grinder setup.

6.6.1.2 Bench and Pedestal Grinder Use

- Wear safety glasses with side shields and a faceshield.
- Keep the floor around the area free of oil, grease, and clutter that could create a trip or slip hazard.
- Ensure that the working surface is clean of scraps, tools, and materials.
- Ensure that guards are in place and in good working order.
- Do not wear any loose clothing or ties. Roll sleeves above the elbow to prevent them from being caught in revolving parts.
- Secure long hair.
- Do not wear gloves, rings, watches, or bracelets.
- Stand to one side of the grinder until the wheel reaches the operating speed.
- Bring work into contact with the grinding wheel slowly and smoothly, without bumping.
- Apply gradual pressure to allow the wheel to warm up evenly. Use only the pressure required to complete a job.
- Move the work back and forth across the face of the wheel to prevent grooves from forming.
- Dress wheels regularly. Do frequent, light dressings rather than heavy dressings. Support dressing tools to apply leverage without undue effort. With revolving cutter dressing tools, use the lugs as anchors. Replace worn wheels if you cannot dress them.
- Discard a wheel if it has been dropped.
- Do not grind on the side of a regular wheel.

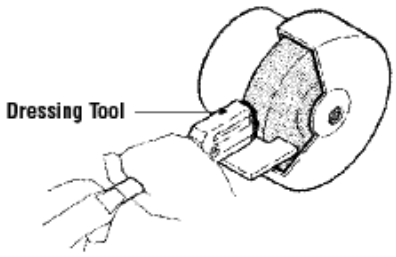

Figure 6.16.—Dress grinding wheels routinely to keep them sharp and effective.

6.6.2 Handling and Storing Bonded Abrasive Wheels

6.6.2.1 Abrasive Wheel Selection

Select the right wheel for the job. It is important for safety. A wheel is dangerous when used for work for which it was not designed.

Use only wheels marked with the type of wheel and maximum speed in revolutions per minute (rpm). Ensure that the mounting equipment is compatible with the wheels rated speed and type.

6.6.2.2 Abrasive Wheel Inspection

Examine the wheel for any signs of damage; then use the “ring test” to check the wheels: Tap the wheels gently with a nonmetallic tool such as a plastic screwdriver handle or wooden mallet. A wheel in good condition will emit a metallic ring. Reject any wheel that sounds dead or cracked.

Ring tests do not apply to wheels with diameters of 10 cm (4 in.) or smaller.

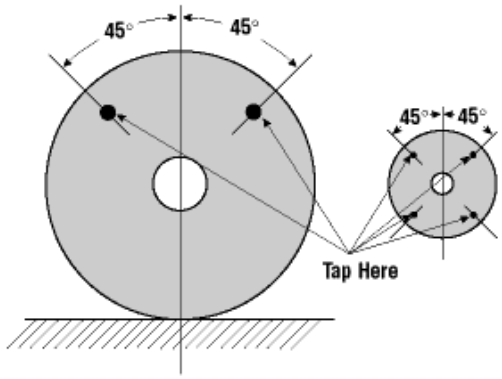

Figure 6.17.—Ring test tapping locations.

6.6.2.3 Wheel Handling and Storing

- Handle wheels carefully. Avoid dropping or bumping.
- Transport wheels in containers designed to provide support for the wheels if they are too heavy to carry by hand.
- Do not pile other items such as tools on top of wheels.
- Store wheels in racks or bins with dividers for different types of wheels.
- Place straight or tapered wheels on end in a cradle or chocked position to prevent rolling.
- Never store wheels near
  - Excessive heat or cold
  - In contact with oil or moisture (liquids can cause balance problems)
  - In drawers with loose tools

6.6.2.4 Mounting Bench and Pedestal Abrasive Wheels

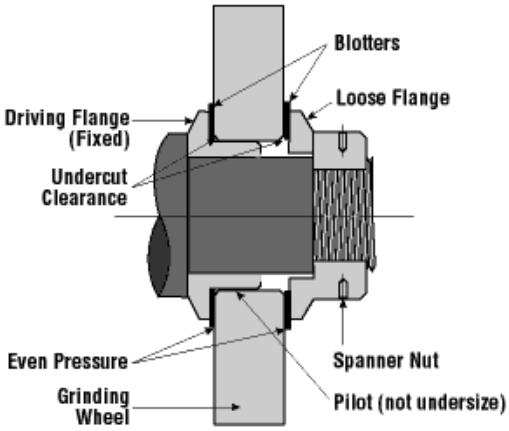

Figure 6.18.—Anatomy of a pedestal grinder.

6.6.2.4.1 Wheel Selection

Ensure that you have the correct type and size wheel for the machine by checking the markings on both. The machine spindle speed must not be greater than the speed marked on the wheel.

6.6.2.4.2 Wheel Inspection

- Examine the wheel for cracks or chips; then perform the ring test:

  Tap the wheel gently with a nonmetallic tool such as a plastic screwdriver handle or wooden mallet. A wheel in good condition will emit a metallic ring. Reject any wheel that sounds dead or cracked. Replace the wheel, if faulty.

- Maintain even pressure from both flanges against the sides of the wheel. Check flanges with a straight edge. Worn or warped flanges must not be used.

- Check the surface of the abrasive wheel and flanges to ensure that no particles are present.

6.6.2.4.3 Wheel Mounting

- Do not force a wheel onto the machine spindle or change the size of the mounting hole.

- Maintain a clearance (undercut relief) of at least 3 mm (1/8 in.) to prevent pressure on the wheel near the hole.

- Use paper blotters between the wheel and the flanges to take up slight wheel surface roughness.

- Ensure that the mounting pilot(s) is rounded with a length of about two-thirds of the width of the wheel.

- Extend the threaded section well inside the loose flange.

- Tighten the grinding wheels just enough to prevent them from slipping. Overtightening the spindle nuts or clamping screws can damage the wheel and grinder parts. With multiple screw-mounting flanges, tighten the bolts uniformly. Start by barely tightening a screw, “snug-up” the opposite screw and, in a crisscross manner, continue until all mounting screws are uniformly tight.

- Place the threads of the central spindle in the direction that will cause the nut to tighten from the force of the work being done.

- Replace all guards.

- Before turning on the power, the operator should turn the wheel by hand to check for appropriate wheel clearance.

- Warn all persons to stay clear of the area where the wheel is used.
- Stand to one side and test the wheel. Start and run the wheel for at least 1 min. If any undue vibration occurs, switch off the wheel immediately and make adjustments.

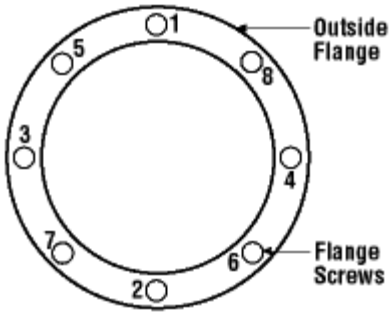

Figure 6.19.—Tightening sequence.

6.6.3 Beveling Machines

- Inspect the electrical cords and cables to ensure that they are in a safe condition.
- Connect electrical cords and hoses in a manner that does not create a trip hazard. If the cord or hose must extend into a pedestrian walkway, measures must be taken prevent a trip hazard.
- Ensure that the beveller has received proper servicing.
- Ensure that the guards are secured and in place around the feed and cutting areas.
- Ensure that the plate is balanced and secured prior to beveling.
- Ensure that the area around the plate is free of trip and slip hazards and obstructions to permit the operator free and safe travel with the beveller.
- Don safety glasses with side shields, a faceshield, and tight-fitting leather or cut-resistant gloves.
- Do not wear loose clothing or gloves.
- Do not wear jewelry (including rings).
- Secure long hair.
- Ensure that the beveler is unplugged when cutter bits are being changed.

6.6.4 Fixture Removal or Installation

- Keep fixtures secured during the entire process of removing fixtures or hardware.
- Keep fixtures secured during the entire process of installing fixtures or hardware.
- Keep the floor around the area free of oil, grease, and clutter that could create a trip or slip hazard.
- Ensure that the working surface is clean of scraps, tools, and materials.
- Ensure that guards are in place and in good working order.
- Do not wear any loose clothing or ties. Roll sleeves above the elbow to prevent them from being caught in revolving parts.
- Secure long hair.
- Do not wear gloves, rings, watches, or bracelets.

- Secure fixtures by any number of methods, including c-clamps, bar clamps, pipe clamps, handscrews, bull dogs, grasshoppers, cranes, mechanical hoists, and other means and methods traditionally used in a fabrication environment.
- Ensure that the attachment and the components can withstand the weight of the fixture and hardware as well as any forces that could be imparted from the fixture slipping.
- Select the clamp size and style on the basis of the holding requirements of the job and the following clamp features:
  - Strength and weight (e.g., consider rail size and nominal clamping pressure)
  - Opening (length of reach)
  - Throat depth (depth of reach)
  - Ease of adjustment
  - Clamping surfaces (material used and size)
- Dispose of clamps with bent frames and spindles.
- Ensure that the pressure plate and anvil parts of the clamp are in full contact with the workpiece before tightening them.
- Use pads with C-clamps to avoid marking the work.
- Remove clamps as soon as the job is finished. Clamps serve only as temporary devices for holding work securely in place.
- Keep all moving parts of clamps lightly oiled and keep tools clean to prevent slippage.
- Ensure that there is no dirt or oil on any part that will come in contact with the work.
- Use deep-throat clamps instead of oversize clamps that have deep throats due to their larger overall size.
- Hand tighten clamps unless they were designed to be tightened with tools.
- Do not use C-clamps for lifting.

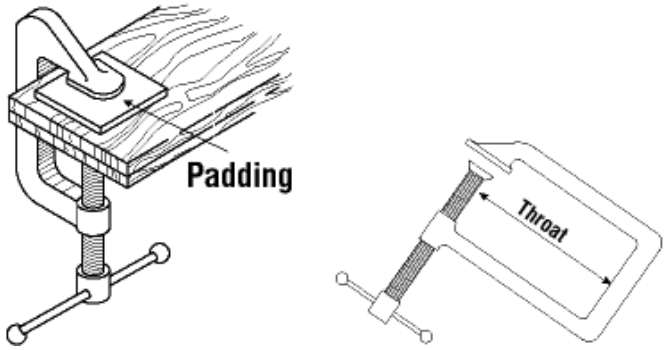

Figure 6.20.—Using C-clamps.

6.6.5 Mechanical Presses

6.6.5.1 Press Inspection

- Check the vise for cracks or other damage before clamping a workpiece in it.
- Ensure that all threaded and moving parts are clean, oiled, and free of chips and dirt.

- Inspect the pads for cracks and damage. Take cracked and damaged devices out of service by placing a tag on them.
- Do not use damaged presses. Presses may not be repaired by welding or brazing.

6.6.5.2 Press Use

- Wear safety glasses with side shields when using striking tools or power tools on a workpiece held by a press.
- Keep the floor around the area free of oil, grease, and clutter that could create a trip or slip hazard.
- Ensure that the working surface is clean of scraps, tools, and materials.
- Ensure that guards are in place and in good working order.
- Do not wear any loose clothing or ties. Roll sleeves above the elbow to prevent them from being caught in revolving parts.
- Secure long hair.
- Do not wear gloves, rings, watches, or bracelets.
- Load and set up the press in a secure manner with the material centered with the press.
- Support the end of extra-long work with an adjustable stand, saw horse, or box rather than putting extra strain on the press and work piece.
- Do not apply heavy pressure at the corner of the press pads.
- Do not use a handle extension (e.g., a pipe) for extra clamping pressure.
- Do not hammer on the handle to tighten beyond hand pressure.
- Do not use the pads of the vise as an anvil.

6.6.6 Press Brakes

6.6.6.1 Press Brake Tooling Installation

Before any tooling can be installed, the ram must be locked in the shut height position, with the ram in its most extended position. Once the press is locked into that position, the tooling can be slid safely into the press.

Not all tooling can be loaded universally into the press brake; many tools can be loaded correctly only one way. The best way to know if you have installed tooling correctly is to look at the tooling from the end and check where the flow of power is (see Fig. 6.21).

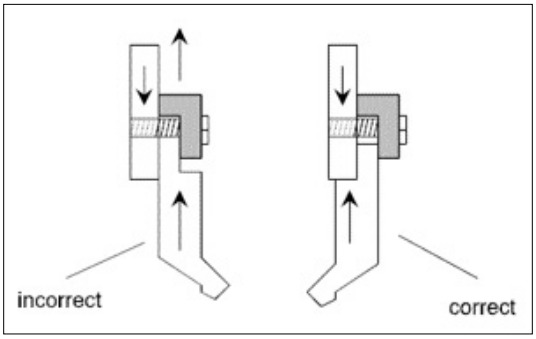

Figure 6.21.—The difference between the proper and improper power flow through a standard precision-ground tooling set is obvious.

Before installing any tooling, check for previous damage that may cause trouble and clean the machine and the tools. Check to make sure that the tooling angles match correctly for the type of forming that you are attempting. Take special care to ensure that the total applied tonnage does not exceed the abilities of the tooling.

6.6.6.2 Press Brake Use

- Ensure that the stops are able to flip out of the way in time.
- Ensure that the ram opens far enough to get the formed piece out of the press.
- Ensure that the back gauge is not going to crash into the tooling.

Conduct a dry-run of the forming program and the press before using any material. This should always be done before starting any job.

When two or more people are working together on the same press brake, only one may be designated as the operator. This duty may never be shared. The operator in charge of the brake must make certain that coworkers are clear of the press before beginning the bending process.

Never apply any pressure on the back gauge—just a light touch is necessary to produce a good part. Pushing against the back gauge with force puts the operator in the position of leaning into the machine.

Setting the open height of the brake correctly is critical (see Fig. 6.22). If you can place your finger between the punch and die, they are too far apart and you could lose a finger. If the open height is set the correct way, there is no chance of losing a finger. For situations that require the open height to be greater than normal practice allows, set the open height to allow only the material to slide between the punch and die.

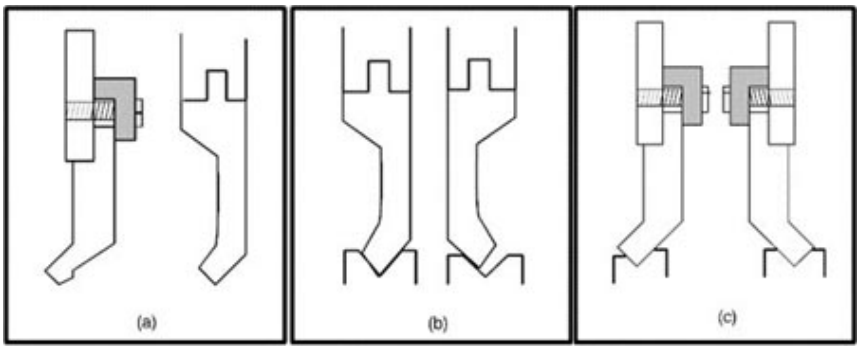

Figure 6.22.—European (a) and standard American (b) press brake tooling are configured differently. American tooling is reversible from a power flow point of view but can lose its center on the die. (c) European tooling performs in the opposite way—reversibility on centers, but mishaps in power flow that are possible if an improper setup is used.

Always use caution when reaching behind tooling. Make sure the back gauge is in position. If the back gauge moves while your hand is there, you can catch your fingers in the tooling.

When operating a flywheel-driven (mechanical) press brake, pay very close attention to drift. If the ram is not brought back up to or past top dead center, chances are good that it will drift back down the wrong way before the clutch reengages. Not knowing where the ram is in relationship to the stroke is the single most common reason for the loss of fingers and limbs among press brake operators.

Remember, with a flywheel-driven press brake, there is no way to reverse the stroke. If you are caught, the stroke has to be completed, regardless of whether or not fingers or hands are in the way.

Always reach around or walk behind the press brake (see Fig. 6.24). Never reach between the punch and die sets for any reason. If you happen to get your hand caught in the brake, it can splinter a finger bone all the way down to the marrow.

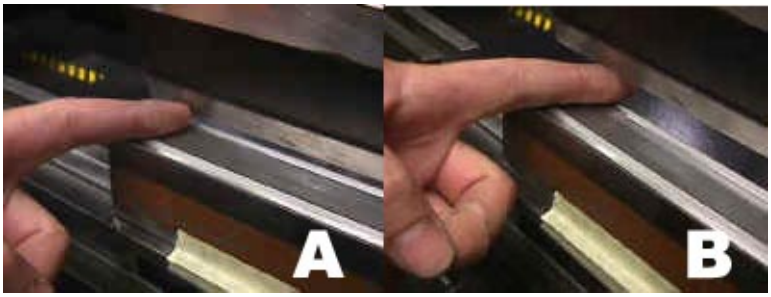

Figure 6.23.—Open height on a press brake should be set in a way that ensures the safety of the operator's fingers.

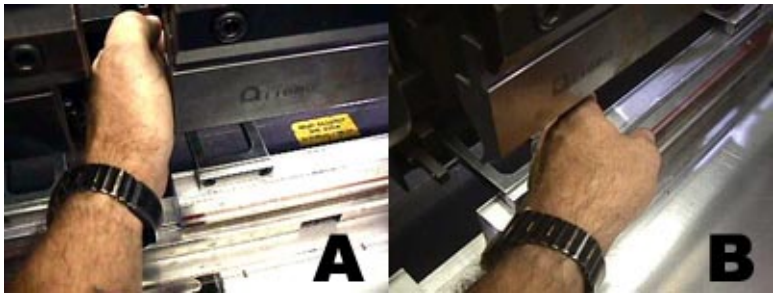

Figure 6.24.—Reaching between a punch and die set is one of the most foolish things a press brake operator can do.

6.6.6.3 Press Brake Safety Tips

The following are some tips for avoiding serious injury while operating a press brake:

- Never put any part of your body between the punch and die. Never let your fingers or other body parts come between your workpiece and the machine. Never hold your workpiece over the top of a previous bend. Keep your face and upper body out of the way for workpiece movement. This will keep you from getting slapped (see Fig. 6.25).
- Do not sit in front of a press brake—you may not be able to move out of the way quickly enough in an emergency.
- Never interrupt someone or allow yourself to be interrupted when operating a press brake.
- Except in an emergency, never try to back a workpiece out of the slip roll while the rollers are still clamped into place. The workpiece is still being rolled regardless of the direction of the roll. This causes the radius to vary for the distance that was traveled by the roller, only in reverse.
- Should it become necessary to remove a workpiece from the slip roller before the work cycle is complete, lift the top roll and remove the piece. Make all the necessary adjustments; then return the workpiece to complete the rolling.

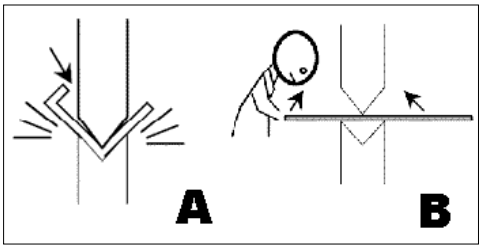

Figure 6.25.—Holding the workpiece over the top of previous bend is a no-no, as is leaning over a

workpiece that is about to be bent, unless you enjoy being slapped in the face by sheet metal.

6.6.7 Metal Shear

- Wear safety glasses with side shields and hearing protection.
- Keep the floor around the area free of oil, grease, and clutter that could create a trip or slip hazard.
- Ensure that the working surface is clean of scraps, tools, and materials.
- Ensure that guards are in place and in good working order.
- Do not wear any loose clothing or ties. Roll sleeves above the elbow to prevent them from being caught in revolving parts.
- Secure long hair.
- Do not wear gloves, rings, watches, or bracelets.
- Ensure that the shear is rated to cut the gauge of sheet metal that you are working with, or you may damage the blade. The gauge rating of a shear is generally marked prominently on the machine.
- Place sheet stock on the table, and slide it below the shield.
- Ensure that no one's feet are below the treadle.
- Ensure that no one is behind the shear.
- Sound the horn before shearing.

6.6.8 Waterknives

6.6.8.1 Waterknife Use

- Load garnet into the waterknife using ergonomically sound and healthful methods.
- Ensure that the proper servicing schedule is being followed for the nozzle and that the nozzle does not need to be replaced.
- When removing cut pieces from the waterknife for inspection, stop the cutting action and tag out the control panel.
- Don hearing protection and safety glasses with sideshields while attending the waterknife unless a sound-level survey determines otherwise.
- Keep the floor around the area free of oil, grease, and clutter that could create a trip or slip hazard.
- Ensure that the working surface is clean of scraps, tools, and materials.
- Ensure that guards are in place and in good working order.
- Do not wear any loose clothing or ties. Roll sleeves above the elbow to prevent them from being caught in revolving parts.
- Secure long hair.
- Do not wear gloves, rings, watches, or bracelets.

6.6.8.2 Crane Support for Waterknives

Attach the necessary hardware to the metal to permit removal from the waterknife without relying on magnets. Small parts can be removed from parent material in the waterknife with magnets.

6.6 Verification of compliance with these requirements is done by SHeD during periodic evaluation and assessments.

6.7 Policies and Procedures for Metal-Working Machines

(29 CFR 1910 Subpart O Machinery and Machine Guarding, 29 CFR 1910 Subpart P Hand and Portable Powered Tools and Other Hand-Held Equipment, 29 USC 654 (a)…General Duty Clause)

6.7.1 Metal-Working Machines—General

6.7.1.1 Metal-Working Machine Setup

- Wear safety glasses with sideshields.
- Check and adjust all safety devices before each job.
- Ensure that the guards are in position and in good working condition before operating.
- Ensure that all stationary equipment is anchored securely to the floor.
- Ensure that all machines have a start/stop button within easy reach of the operator.
- Ensure that keys and adjusting wrenches have been removed from the machine before turning on the power.
- Provide a convenient tool rack.
- Ensure that all cutting tools and blades are clean and sharp. They must be able to cut freely without being forced.
- Ensure that the area around the machine is free of clutter, debris, and oil to prevent trip hazards.
- Ensure that there is enough room around the machine to do the job safely.
- Ensure that the working surfaces are clean of scraps, tools, and materials.
- Do not wear any loose clothing or ties. Roll sleeves above the elbow to prevent them from being caught in revolving parts.
- Secure long hair.
- Do not wear gloves, rings, watches, or bracelets.

6.7.1.2 Metal-Working Machine Use

- Stop the machine before measuring, cleaning, or making adjustments.
- Use a vacuum, brush, or rake to remove cuttings. Do not handle cuttings by hand.
- Keep hands away from the cutting head and all moving parts.
- Avoid awkward operations and hand positions. A sudden slip could cause your hand to move into the cutting tool or blade.
- Each machine should have only one operator at one time.
- Machines must be attended at all times.
- Shut down power and bleed residual energy following lockout/tagout procedures before trying to free a stalled cutter. See Chapter 9 of the Glenn Safety Manual for more information on lockout/tagout.
- Keep rags away from the moving parts of machines.

6.7.1.3 Postmachining Tasks

Clean all tools, and return all portable tooling to their proper storage place after use.

6.7.2 Drill Presses

6.7.2.1 Drill Press Setup

- Wear appropriate safety glasses with side shields.
- Ensure that the drill press has a start/stop button within easy reach of the operator.
- Ensure that drill bits are clean and sharp. Dull drills are a common cause of breakage.
- Keep the floor around the drill press free of oil, grease, and clutter that could create a trip or slip hazard.
- Ensure that the working surface is clean of scraps, tools, and materials.
- Ensure that guards are in place and in good working order.
- Do not wear any loose clothing or ties. Roll sleeves above the elbow to prevent them from being caught in revolving parts.
- Secure long hair.
- Do not wear gloves, rings, watches, or bracelets while working with a drill press.
- Remove the chuck key from the chuck.

6.7.2.2 Drill Press Use

- Use a vacuum, brush, or rake to remove cuttings.
- Remove burrs and chips from a drilled hole. When making deep holes, clean out the hole frequently.
- Use a strap, clamp, or drill-press vise to prevent work from spinning or from being pulled up away from the work-holding device, which would then allow the workpiece to spin.
- Lubricate the drill bit when drilling metal to prevent chips and the drill bit from being caught in the workpiece.
- Use the appropriate drill designed for the workpiece material. For example, brass drills for brass, plastic drills for plastics, and so forth.
- Reduce the drilling pressure when the drill begins to break through the workpiece. This action prevents the drill from pulling into the work and breaking.
- Adjust speeds and measure work once the machine has completely stopped.
- Keep hands away from under the stock while it is being drilled.
- Do not use your hand to stop the chuck and spindle from rotating.
- Drill presses must be attended at all times while running.

6.7.3 Lathes

6.7.3.1 Lathe Setup

- Wear appropriate safety glasses with side shields.
- Ensure that the lathe has a start/stop button within easy reach of the operator.
- Follow job specifications for the speed, feed, and depth of cut for the materials being turned.
- Ensure that all work runs true and centered.

- Center the workpiece deeply enough to provide support for the piece while it is turning.
- Use a lifting device to handle heavy chucks or work.
- Inspect chucks for wear or damage. Flying pieces can be very dangerous.
- Remove the chuck wrench immediately after adjusting the chuck.
- Use a barrier guard when operating the lathe in the semiautomatic or automatic mode.
- Remove all tools, measuring instruments, and other objects from the saddle or lathe bed before starting the machine.
- Ensure that the chip and coolant shields are in place.
- Ensure that the floor around the lathe is free of oil, grease, and clutter that could create a trip or slip hazard.
- Ensure that the working surface clean of scraps, tools, and materials.

6.7.3.2 Lathe Use

- Shut off the power supply to the motor before mounting or removing accessories.
- Stop the lathe before taking measurements of any kind.
- Use a vacuum, brush, or rake to remove cuttings only after the lathe has stopped moving.
- Do not leave lathe operations unattended.

6.7.4 Milling Machines

6.7.4.1 Mill Setup

- Wear appropriate safety glasses with side shields.
- Remove gloves, rings, watches, and loose clothing. Tie back long hair.
- Ensure that the floor around the mill is free of oil, grease, and clutter that could create a trip or slip hazard.
- Ensure that the working surface is clean of scraps, tools, and materials.
- Ensure that the milling machine has a start/stop button within easy reach of the operator.
- Before starting, make sure that
  - All guards are in place.
  - Work is properly secured in place and mounted squarely.
  - Bolts used to hold down work clear the tooling.
  - Tooling and supporting pieces are properly tightened in position.
  - Table stops are secured properly.
  - Handles on all feed screws are in neutral.
  - Table is free of stock, tools, or other loose material.
  - The arbor and arbor support are clear of the work.
- Mount work in a vise that is bolted or held magnetically to the table.
- Wear gloves when handling milling cutters to avoid being cut when handling them.
- Move table as far as possible from the cutter while setting up work to avoid injuring your hands.

- Ensure that the following factors are considered when setting cutting speed:
  - Material to be machined
  - Type of cutter
  - Finish required
  - Depth of cut
  - Rigidity of machine and workpiece

6.7.4.2 Mill Use

- Keep hands, brushes, and rags away from the revolving milling cutter.
- Use a vacuum, brush, or rake to remove cuttings only after the cutters have stopped moving.
- Change cutting compounds periodically.
- Keep cutters sharpened correctly and in good condition.
- Keep working surface clear of scraps, tools, and materials.
- Use lifting equipment when appropriate to move heavy work to or from milling machines.
- Wait until cutter is completely stopped to mount, measure, or adjust work.
- Do not use an excessively heavy cut or feed as it can cause the cutter to break. The flying pieces could cause serious injury.
- Do not reach over or near a revolving cutter. Keep hands at least 12 in. from a revolving cutter.
- Do not lean or rest hands on a moving table.
- Wait until the machine stops running to make adjustments.
- Only move the operating levers if you know what they control and what action is going to take place.
- Attend the machine the entire time that it is running.

6.7 Verification of compliance with these requirements is done by SHeD during periodic evaluation and assessments.

6.8 Policies and Procedures for Non-powered Hand Tools

(29 CFR 1910 Subpart P Hand and Portable Powered Tools and Other Hand-Held Equipment, 29 USC 654 (a)…General Duty Clause)

6.8.1 General Hand Tools

6.8.1.1 Hand Tool Selection

Select the right tool for the job. Substitutes increase the chance of having an accident. Tools will only be used for tasks they were designed for. For example, do not use a slot screw driver as a chisel, pry bar, wedge, or punch or use wrenches as hammers.

Use tools designed to allow your wrist to stay straight. Avoid using hand tools with your wrist bent.

6.8.1.2 Hand Tool Inspection

- Inspect tools for defects before use. Replace or repair defective tools.
- Replace cracked, splintered, or broken handles on files, hammers, screwdrivers, or sledges; or discard the tool. Do not use damaged tools.

- Ensure that the handles of tools like hammers and axes fit tightly into the head of the tool.
- Replace wrenches, pipe tools, and pliers with worn jaws.
- Discard any hammer with a mushroomed or chipped face or with cracks in the claw or eye sections.

6.8.1.3 Hand Tool Storage

- Keep cutting tools sharp. Cover sharp edges with a suitable covering to protect the tool and to prevent injuries from unintended contact.
- Lay pointed and sharp tools (e.g., saws, chisels, and knives) with the sharp edges pointed away from walkways.
- Ensure that tool handles do not extend over the edge of the bench top.
- Do not leave tools unsecured on the upper levels of ladders and hardware where they could fall onto someone below.
- Return tools to their proper storage location at the end of the shift.

6.8.1.4 Hand Tool Use

- Use wrenches and pliers for pulling but not for pushing.
- Tether tools when you are working on upper levels. Areas below the work zone must be barricaded. Persons working below must wear hard hats.
- Keep the work environment clean and tidy to avoid clutter that could cause accidents and to remove additional risks in the event of a fall.
- Use a heavy belt or apron and hang tools at your sides, not behind your back.
- Do not apply excessive force or pressure on tools. This increases the risk of slipping and personal injury or damage to hardware.
- Cut away from yourself when using cutting tools.
- Do not hold a workpiece in the palm of your hand when using a cutting tool or a screwdriver.
- Wear tight-fitting work gloves when using hand tools.
- When handing a tool to another worker, present it handle first.
- Carry tools in a way that does not interfere with using both hands on a ladder, while climbing on a structure, or when doing any hazardous work. When working on a ladder or scaffold, raise or lower tools using a bucket and hand line or other means that allows safe climbing.

6.8.2 Hammers

6.8.2.1 Hammer Selection

- Select a hammer that is comfortable for you and that is the proper size and weight for the job.
- Select a hammer that is appropriate for the material. Misuse can cause the striking face to chip, possibly causing a serious injury.
- Choose a hammer with a striking face diameter approximately 0.5 in. larger than the face of the tool being struck (e.g., chisels, punches, wedges, etc.).

6.8.2.2 Hammer Inspection

- Ensure that the head of the hammer is firmly attached to the handle.

- Replace loose, cracked, or splintered handles or dispose of the hammer.
- Discard any hammer with a mushroomed or chipped face or with cracks in the claw or eye sections.
- Do not redress, grind, weld, or reheat-treat a hammer head.

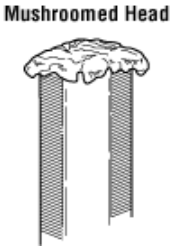

Figure 6.26.—Hammers, punches, chisels, and other tools with mushroomed heads should be discarded and replaced.

6.8.2.3 Hammer Use

- Wear safety glasses with side shields when using a hammer.
- Strike a hammer blow squarely with the striking face parallel to the surface being struck. Always avoid glancing blows and over and under strikes. (Hammers with beveled faces are less likely to chip or spall.)
- Look behind and above you before swinging the hammer to ensure no persons or obstacles are in the swing radius.
- Hold the hammer with your wrist straight and your hand firmly wrapped around the handle.
- Do not strike with the side or cheek of the hammer.

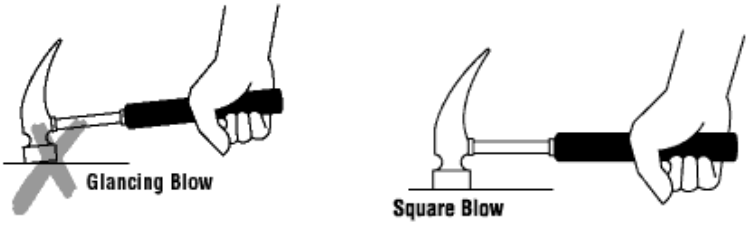

Figure 6.27.—Strike the hammer squarely.

Figure 6.28.—Hold the hammer with your wrist straight and hand firmly wrapped around the handle.

Figure 6.29.—Do not strike with the side or cheek of the

hammer.

6.8.3 Nonpipe Wrenches

6.8.3.1 Nonpipe Wrench Selection

- Select the correct wrench for the job:
  - Pipe wrenches for pipes, plumbing, and fittings
  - General-use wrenches for nuts and bolts
- Do not insert a shim in a wrench for a better fit.
- Select the correct jaw size to avoid slippage.
- Select a box or socket wrench with a straight handle, rather than an offset handle, when possible.

6.8.3.2 Nonpipe Wrench Inspection

- Inspect open-ended wrenches for distorted jaws and box wrenches for broken or damaged points. Discard any damaged wrenches.
- Ensure that the teeth of a pipe wrench are sharp and free of oil and debris and that the pipe or fitting is clean to prevent unexpected slippage and possible injuries.

6.8.3.3 Nonpipe Wrench Use

- Position your body in a way that will prevent you from losing balance and hurting yourself if the wrench slips or something (e.g., a bolt) suddenly breaks.
- Ensure that the jaw of an open-ended wrench is in full contact (fully seated, “flat,” not tilted) with the nut or bolt before applying pressure.
- When turning an adjustable wrench, the direction of the turn should be against (toward) the permanent jaw.
- Apply a small amount of pressure to a ratchet wrench initially to ensure that the ratchet wheel (or gear) is engaged with the pawl (a catch fitting in the gear) for the direction toward which you are applying pressure.
- Support the head of the ratchet wrench when socket extensions are used.
- Pull on a wrench using a slow, steady pull; do not use fast, jerky movements.
- Ensure that adjustable wrenches do not “slide” open during use.
- When using a wrench, pull it toward you. You are more likely to lose your balance if the wrench slips when you are pushing it. Do not use a wrench that has a bent handle or is damaged.
- Do not strike a wrench (except a “strike face” wrench) with a hammer, or similar object, to gain more force.
- Do not increase the leverage by adding sleeved additions (e.g., a pipe) to increase tool handle length.
- Do not expose a wrench to excessive heat (like from a blow torch) that could affect the temper of the metal.

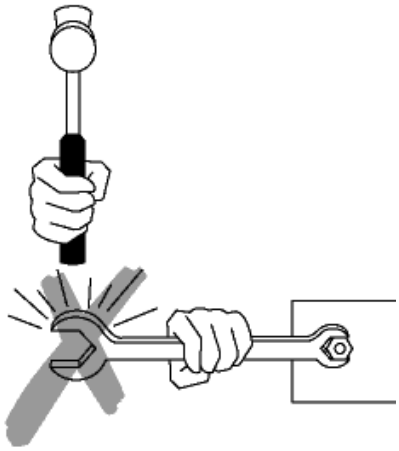

Figure 6.30.—Do not strike a wrench with a hammer or other object to gain more force.

6.8.4 Pipe Tools—Wrenches, Cutters, Reamers, and Threaders

6.8.4.1 Pipe Wrench Selection

- Select a pipe wrench with sufficient capacity and leverage to do the job. The wrench must be large enough to allow a gap between the jaw hook and the back of the throat.
- Always use tools for the purpose they were intended. Use a pipe wrench to turn or hold a pipe.
  - Never use a pipe wrench to bend, raise, or lift a pipe.
  - Never use a pipe wrench as a hammer.
  - Never strike a pipe wrench with a hammer.
  - Never use pipe wrenches on nuts and bolts.

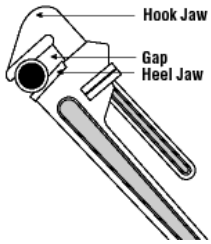

Figure 6.31.—Allowing a gap between the back of the hook jaw and the pipe produces maximum gripping force.

6.8.4.2 Pipe Wrench Inspection

- Inspect pipe wrenches periodically for worn or unsafe parts and replace them (e.g., check for worn threads on the adjustment ring and movable jaw).
- Keep pipe wrench teeth clean and sharp.

6.8.4.3 Pipe Wrench Use

- Adjust the pipe wrench grip to maintain a gap between the back of the hook jaw and the pipe. This concentrates the pressure at the jaw teeth, producing the maximum gripping force. It also aids the ratcheting action.

- Face a pipe wrench forward. Turn the wrench so that the pressure is against the heel jaw.
- Pull, rather than push, on the pipe wrench handle. Maintain a proper stance with your feet firmly placed to hold your balance.
- Do not use a pipe extender for extra leverage. Get a larger pipe wrench.

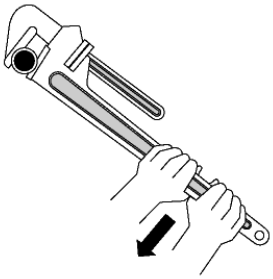

Figure 6.32.—Always pull the wrench towards you.

6.8.4.4 Cutter, Reamer, and Threader Selection

- Choose a cutting wheel suitable for cutting the type of pipe material required:
  - Thin wheel for cutting ordinary steel pipe
  - Stout wheel for cutting cast iron
  - Other wheels for cutting stainless steel, plastic, and other materials
- Select the proper hole diameter and correct tap size to tap a hole. The hole must be sized so that the thread cut by the tap will be about 75 percent as deep as the thread on the tap.
- Use a proper tap wrench (with a “T” handle) for turning a tap.

6.8.4.5 Cutter, Reamer, and Threader Inspection

Replace pipe cutter wheels that are nicked or otherwise damaged.

6.8.4.6 Cutter, Reamer, and Threader Use

- Use a three- or four-wheeled cutter if there is not enough space to swing a single-wheel pipe cutter completely around the pipe.
- Use lubricant or machine cutting fluid with metals other than cast iron.
- Remove chips to prevent flutes (grooves in the tap that allow metal chips to escape from the hole) from getting clogged). The chips may prevent the tap from turning, and the tap may break if you continue to apply pressure.
- Do not use a conventional adjustable wrench for turning a tap; it will cause uneven pressure on the tap that may cause it to break.
- Do not thread any rod or other cylindrical object that is larger in diameter than the major diameter of the die thread.
- A spiral reamer cannot be used on a rotating pipe. The reamer may snag and cause serious injury.

6.8.5 Pliers and Wire Cutters

6.8.5.1 Pliers and Wire Cutter Selection

- Select the correct tool for the job. Pliers are made in various shapes and sizes and for many uses. Some are used for gripping something round like a pipe or rod, some are used for twisting wires, and others are designed to be used for a combination of tasks including cutting wire. There are also tools that are used just for cutting wires (as opposed to wire cable and rope).
- Choose pliers or wire cutters that have a grip span of 2 1/2 to 3 1/2 in. to prevent your palm or fingers from being pinched when the tools are closed.
- Select adjustable pliers that allow you to grip the workpiece firmly while maintaining a comfortable handgrip (i.e., hand grasp is not too wide).

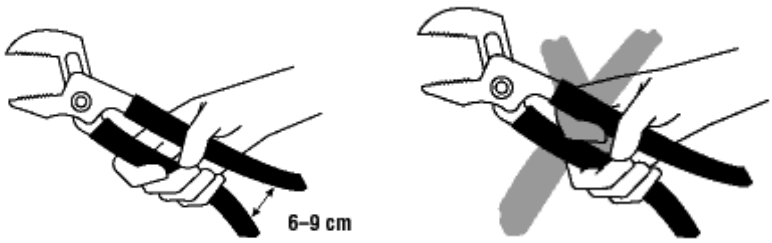

Figure 6.33.—Choose pliers that have a grip span of 2.5 to 3.5 in.

6.8.5.2 Pliers and Wire Cutter Inspection

- Ensure that the cutting edges are sharp. Tools with dull and worn cutting edges require many times more force for cutting than do tools with sharp edges.
- Ensure that the toothed jaws are clean and sharp. Greasy or worn down jaws can compromise safety. Such tools also require increased force to hold the workpiece which, in turn, increases the risk of muscular fatigue and repetitive strain injuries.

6.8.5.3 Pliers and Wire Cutter Use

- Wear safety glasses with side shields to protect your eyes from flying particles, pieces of wire, and other hazards.
- Cut at right angles. Never rock a cutting tool from side to side or bend a wire back and forth against the cutting edges.
- Oil pliers and wire cutters regularly. A drop of oil on the hinge will make the tools easier to use.
- Pull on the pliers; do not push away from you when applying pressure. If the tools slips unexpectedly, you may lose your balance or hit your hand against equipment or something else hard that could result in an injury.
- Do not use cutters on hardened wire unless the pliers or wire cutters are specifically manufactured for this purpose.
- Keep pliers and wire cutters away from welding operations and excessive heat.
- Do not bend stiff wire with light pliers. Needle-nose pliers can be damaged by using the tips to bend large wire.
- Do not use pliers as a hammer, and do not use hammers on pliers or cutters to cut wires or bolts.

- Do not use tools with cushion-grip handles for jobs requiring tools with electrically insulated handles. Cushion grips are for comfort primarily and do not protect against electric shock.
- Do not use pliers on nuts and bolts; use a wrench instead.

6.8.6 Screwdrivers

6.8.6.1 Screwdriver Selection

- Choose contoured handles that fit the shank tightly, with a flange to keep your hand from slipping off the tool.
- Select a slot screwdriver with a blade tip width that is the same as the width of the slotted screw head.
- For cross-head screws, select the correct size and type of screwdriver: a Phillips screwdriver may slip out of a screw head designed for use with the slightly flatter tipped Pozidriv screwdriver.
- Select a head size that is the same width as the screw.

6.8.6.2 Screwdriver Inspection

- Clean the screwdriver handle. A greasy handle could cause an injury or damage the hardware from unexpected slippage.
- Ensure that the tips are square and not rounded or with damaged edges.
- Ensure the handle is not broken and the shaft is not bent. Remove damaged tools from service

6.8.6.3 Screwdriver Use

- Use a vise or clamp to hold the stock if the piece is small or moves easily. Do not hold the stock in one hand while using the screwdriver with the other. If the screwdriver slips out of the slot you may cut your hand.
- Shut off electricity before beginning work on electrical equipment (lock out, deenergize, and tag out).
- Use a screw-holding screwdriver (with screw-holding clips or magnetic blades) to get screws started in awkward, hard-to-reach areas.
- Use an offset screwdriver in close quarters where a conventional screwdriver cannot be used (see Figure 6.34).

Figure 6.34.—Offset screwdrivers can be used to get into close quarters.

- Use a screwdriver that incorporates the following features when continuous work is needed:
  - A pistol grip to provide for a straighter wrist and better leverage
  - A “Yankee drill” mechanism (spiral ratchet screwdriver or push screwdriver) that rotates the blade when the tool is pushed forward
  - A ratchet device to drive hard-to-move screws efficiently
  - A powered screwdriver
- File a rounded tip square making sure that the edges are straight. A dull or rounded tip can slip out of the slot and cause hand injury or damage to materials.
- Store screwdrivers in a rack or partitioned pouch so that the proper screwdriver can be selected quickly.

- Do not lean or push on a screwdriver with any more force than necessary to keep contact with the screw. A screw properly piloted and fitted will draw itself into the right position when turned. Keep the shank directly over the screw being driven.
- Do not use a screwdriver to pry, punch, chisel, score, scrape, or stir paint.
- Keep screwdriver blades away from excessive heat. Heat can affect the temper of the metal and weaken the tool.
- Do not carry screwdrivers in your pockets. If you fall, the blade could cause injury.

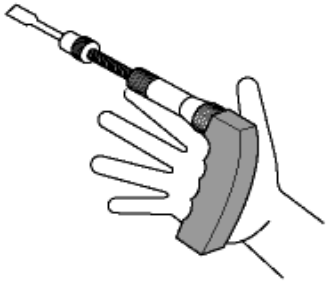

Figure 6.35.—Pistol grip and ratchet spreaders can give better leverage.

6.8.7 Snips

6.8.7.1 Snips Selection

Select the right size and type of snips for the job; check the manufacturer's specifications about the intended use of the snips (e.g., type of cut—straight, wide curve, tight curve, right or left, and maximum thickness and kind of metal or other material that can be cut).

- Snips for cutting straight lines
- Snips for cutting curves to the left or curves to the right
- Universal snips, for cutting both straight lines and wide curves
- Straight snips and duckbill snips (flat blade, "perpendicular" to the handle, with pointed tips) for cutting straight lines; some duckbill snips for cutting curved lines
- Hawk's bill snips (with crescent-shaped jaws) for cutting tight circles
- Aviation snips with compound leverage to reduce the effort required for cutting
- Offset snips with jaws that are set at an angle from the handle to enable you to keep your hands safely above the cut while cutting directly through the center of a large sheet

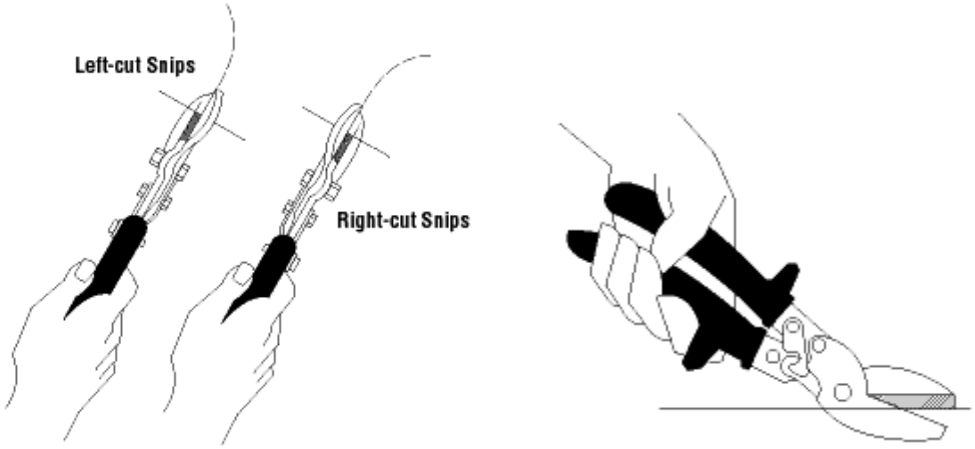

Figure 6.36.—Select the right snips for the job.

6.8.7.2 Snips Inspection

Ensure that the snips are sharp and in good condition and that the nut and the pivot bolt are properly adjusted at all times.

6.8.7.3 Snips Use

- Wear protective gloves and safety glasses with side shields when working with snips. Small pieces of metal may go flying in the air.
- Use snips for cutting soft metal only. Hard or hardened metal must be cut with cutting tools designed for that purpose.
- Use ordinary hand pressure for cutting. If extra force is needed, use a larger tool. Do not extend the length of handles to gain greater leverage.
- Cut so that the waste is on the right if you are right-handed or on the left if you are left-handed.
- Avoid springing the blades. This results from trying to cut metal that is too thick or heavy for the snips you are using.
- Oil the pivot bolt on the snips occasionally.

6.8.8 Struck Tools—Chisels, Punches, Nail Sets, and Wedges

6.8.8.1 Struck Tool Selection

Struck tools are made in various shapes and sizes and for many uses and include cold chisels, punches, nail sets, rock and star drills, and wedges. Use the correct tool for the job.

6.8.8.2 Struck Tool Inspection

- Ensure that the tools are good condition before use (i.e., cutting edges are sharp and the struck head is not mushroomed or chipped).
- Discard tools that are bent, cracked, or chipped.
- Discard and replace hammers, punches, chisels, and other tools with mushroomed heads.

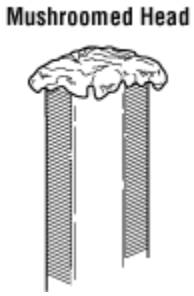

Figure 6.37.—Hammers, punches, chisels, and other tools with mushroomed heads should be discarded and replaced.

6.8.8.3 Struck Tool Use

- Wear gloves and safety glasses with side shields.
- For shearing and chipping, hold the chisel at an angle that permits the bevel of the cutting edge to lie flat against the shearing plane.
- Use hand protection whenever possible. There are various methods possible:
  - Force a sponge rubber shield onto the shaft of a chisel.
  - Use a struck tool that comes with a hand protector designed for the tool.
  - Use a punch or chisel holder.
- Do not use cold chisels to cut or split stone or concrete.
- Do not use a drift pin punch (also called an aligning punch) to drive, remove, or loosen pins, keys, and rivets.
- When using a bull-point chisel, use tongs or a chisel holder to guide the chisel to prevent injury to the hand holding the chisel.

6.8.8.4 Sharpening and Redressing Tools

- Redress the points and cutting edges to their original shape. Grind to a slightly convex cutting edge. The point angle of the chisel must be 70° for hard metals, 60° for soft.
- Do not apply too much pressure to the head when grinding a chisel. The heat generated can remove the temper.
- Immerse the chisel in cold water periodically when grinding.

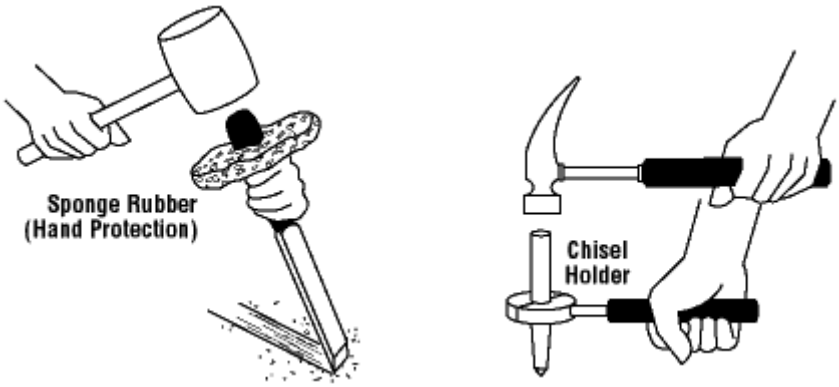

Figure 6.38.—Tools are available to protect hands.

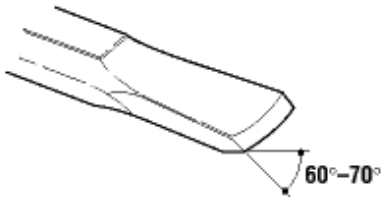

Figure 6.39.—The chisel angle must be 70° for hard metals and 60° for soft metals.

6.8.9 Vises

6.8.9.1 Vise Selection

Use a vise large enough to hold the work without strain.

6.8.9.2 Vise Inspection

- Check the vise for cracks or other damage before clamping a workpiece in it.
- Ensure that all threaded and moving parts are clean, oiled, and free of chips and dirt.
- Replace any bent handles and worn jaw inserts.
- Inspect the vise for cracks. Take cracked vises out of service and replace them.
- Do not use damaged vises. Vises cannot be repaired by welding or brazing.

6.8.9.3 Vise Use

- Wear safety glasses with side shields when using striking tools or power tools on a workpiece held by a vise.
- Place the workpiece in the vise so that the full clamping surface of the jaw supports the workpiece.
- Use jaw liners in a vise if there is any possibility of marking the work.
- Keep the workpiece in the vise close as possible to the jaws to prevent vibration when sawing, filing, and other operations.
- Support the end of extra long work with an adjustable stand, saw horse, or box rather than putting extra strain on the vise.
- Do not try to bend a heavy rod in a light vise.
- Do not cut into the jaws.

- Do not apply heavy pressure at the corner of the vise jaws.
- Do not use a handle extension (e.g., a pipe) for extra clamping pressure.
- Do not hammer on the handle to tighten beyond hand pressure.
- Do not use the jaws of the vise as an anvil.

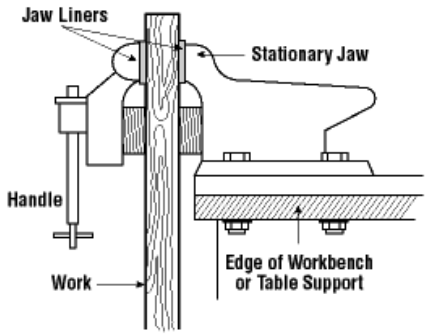

Figure 6.40.—A properly mounted vise.

6.8.9.4 Securing a Vise

- Attach a vise securely to a stable surface such as a bench top. Place bolts in all the holes in the base of the vise, and use lock washers under the nuts. (Vises cannot be welded).
- Ensure that the workbench is firmly secured to its base.
- Mount the vise so that the stationary jaw projects slightly beyond the edge of the workbench. This allows long work to be clamped in the vise without interference from the edge of the workbench.

6.8.10 Torque Wrenches

All torqueing operations must be accompanied by a written instruction that is either in a standalone document or on a drawing. The written instruction must include information on torque values and contain the tightening sequence and specify either nonlubricated threads or the lubricant for the threads. The instructions must clearly define the conditions for which the torque values were selected.

The design engineer will specify the proper lubricant if one is to be used (such as a specific antiseizing compound that may be required to prevent galling of thread materials in high-temperature applications) and the torque value that applies when this compound is used.

When torque values are specified in the written instruction, a calibrated torque wrench shall be used to tighten the fastener. On defined critical assemblies, torque-calibrated impact or nut-runner wrenches shall not be substituted for a precision torque wrench.

Coating the mating surfaces of joints is not permitted. All joints are to be assembled uncoated, clean and dry, metal-to-metal (except nonmetallic gasket designs).

Torque value specifications are required for all critical fasteners, such as rotating couplings, pressure joints, and components subject to high-speed or high-load vibration, high temperature, or severe temperature variation.

The written instruction will need to contain the following information:

- Size, type, fit, and plating of threads
- Materials of the joined fastener and pieces
- Whether washers are to be used and, if so, whether they are hardened or plain
- Whether threads are to be dry or lubricated and, if lubricated, what lubrication is to be used

- The tightening sequence to be used (if applicable)
- Whether a nut or a bolt is to be used

Before torqueing a fastener, verify that

- Components of both the fasteners and the joint are as specified

  Components of the joint and the fastener are clean—no coating on the mating surfaces of the joint; no paint on the face of nuts or bolt heads; and no burrs, grit, or dirt on threads—not just "as received"
- During the rundown of the fastener to the snug position, the turning effort shall match the specified fit (If a Class-2 fit (free-running fit) is specified, the assembler will need to be able to easily finger-turn the fasteners during rundown.)
- The torque units of the instruction match those of the wrench
- The wrench is within calibration

The use of an adapter or extension on a torque wrench will result in a greater torque application than indicated by the dial or setting. Thus, when an adapter or extension is used, the torque reading or setting must be determined as follows:

$$\text{Torque reading or setting} = \frac{\text{specified torque (actual)} \times \text{length of wrench}}{\text{(length of effective + wrench + extension)}}$$

- Do not attempt to use a torque wrench to tighten a fastener to a higher value than the maximum value shown on the torque wrench indicator or setting.
- Fully install sockets on the nut or bolt. Maintaining a slight inload (force holding toward the fastener) on the tool will lessen the chances of damage to the fastener.
- Never jerk a torque wrench. Force must be applied slowly to obtain an accurate indication of the torque being applied to the fastener.
- Take torque readings only while tightening the fastener. Do not over tighten and then loosen to the desired torque value.
- Ensure that all torque wrenches are calibrated by authorized personnel at least annually to compensate for wear. The wrenches shall be identified by serial number and tagged with the calibration date; they shall not be used after the void date shown on the wrench. In order to ensure that all wrenches are available for annual calibration, each one is to be returned to the tool crib at the end of each shift.

6.8 Verification of compliance with these requirements is done by SHeD during periodic evaluation and assessments.

- Do not keep torque wrenches in tool boxes, supply cabinets, and similar containers.
- Recalibrate the wrench if it is dropped. (In general, dial or click types are not as durable as beam memory torque wrenches.)
- When the torque specification calls for the use of a torque-calibrated impact or nut-runner wrench, take care to ensure the proper preparation of the air (clean, dry, well-controlled pressure, and proper lubrication) before it enters the pneumatic tool.

6.9 Policies and Procedures for Powered Hand Tools

(29 CFR 1910 Subpart O Machinery and Machine Guarding, 29 CFR 1910 Subpart P Hand and Portable Powered Tools and Other Hand-Held Equipment, 29 USC 654 (a)…General Duty Clause)

6.9.1 Electrical Tools—General

6.9.1.1 Electrical Tool Inspection

- Inspect tools for any damage prior to each use.
- Check the handle and body casing of the tool for cracks or other damage.
- If the tool has auxiliary or double handles, check to see that they are installed securely.
- Inspect cords for defects; check the power cord for cracking, fraying, and other signs of wear or faults in the cord insulation.
- Check for damaged switches and for ones with faulty trigger locks.
- Inspect the plug for cracks and for missing, loose, or faulty prongs.
- If a tool is defective, remove it from service, and tag it clearly “Out of service for repair.”
- Replace damaged equipment immediately; do not use defective tools temporarily.
- Ensure that you have been properly trained to use the tool safely. Read the operator’s manual before using the tool, and operate the tool according to the manufacturer’ instructions. Use only tested and approved tools.
- Ensure that the power tool has the correct guard, shield, or other attachment that the manufacturer recommends.
- Prevent shocks. Ensure that the tools are properly grounded using a three-prong plug, are double-insulated (and are labeled as such), or are powered by a low-voltage isolation transformer; this will protect users from an electrical shock.
- Check electric tools to ensure that a tool with a three-prong plug has an approved three-wire cord and is grounded. The three-prong plug must be plugged in a properly grounded three-pole outlet. If an adapter must be used to accommodate a two-hole receptacle, the adapter wire must be attached to a known, functioning ground. NEVER remove the third (grounding) prong from a plug.
- Replace open front plugs with dead-front plugs. Dead-front plugs are sealed and present less danger of shock or short circuit.
- Never break off the third prong on a plug; replace broken three-prong plugs, and ensure that the third prong is properly grounded.

Figure 6.41.—Only use dead-front plugs.

6.9.1.2 Battery-Powered Tools

- Use only the kind of battery that the tool manufacturer specifies for the battery-powered tool that you are using.
- Recharge a battery-powered tool only with a charger that is specifically intended for the battery in that tool.
- Remove the battery from the tool or ensure that the tool is switched off or locked off before changing accessories, making adjustments, or storing the tool.
- Store a battery pack safely so that no metal parts, nails, screws, wrenches, and so on can come in contact with the battery terminals; this could result in shorting the battery and possibly cause sparks, fires, or burns.

6.9.1.3 Electrical Tool Use

- Wear safety glasses with side shields.
- Remove gloves, rings, watches, and loose clothing.
- Tie back long hair.
- Ensure that the floor around the area is free of oil, grease, and clutter that could create a trip or slip hazard.
- Ensure that the working surface is clean of scraps, tools, and materials.
- Switch off the tools before connecting them to a power supply.
- If a power cord feels more than comfortably warm or if a tool is sparking, have it checked by an electrician.
- Disconnect the power supply before making adjustments or changing accessories.
- Remove any wrenches and adjusting tools before turning on a tool.
- During use, keep power cords clear of tools and the path that the tool will take.
- Use clamps, a vise, or other devices to hold and support the piece being worked on, when practical to do so. This will allow you to use both hands for better control of the tool and will help prevent injuries if a tool jams or binds in a workpiece.
- Use only approved extension cords that have the proper wire size (gauge) for the length of cord and power requirements of the electric tool that you are using. This will prevent the cord from overheating.
- Secure power cords that extend into walkways or work areas to eliminate tripping hazards.
- Ensure that cutting tools, drill bits, and other tools are kept sharp, clean, and well maintained.
- Wait for the tool to completely stop running before setting it down.
- Always unplug a tool before walking away from it.
- Only use electric tools in dry conditions unless the tool is connected to a ground fault circuit interrupter (GFCI).
- Stop using an electric power tool if you feel a tingle in your fingers. This is a warning that the tool is faulty and needs repair.
- Do not connect or splice extension cords together to make a longer connection; the resulting extension cord may not be able to provide sufficient current or power safely.
- Carry electrical tools by the handle, not by the power cord.
- Do not tie power cords in knots. Knots can cause short circuits and shocks. Loop the cords or use a twist-lock plug.
- Extension cords cannot be used as permanent wiring; use extension cords only as a temporary power supply to an area that does not have a power outlet. All extension cords must be grounded and have GFCI protection.
- Do not walk on or allow vehicles or other moving equipment to pass over unprotected power cords. Cords must be put in conduits or protected by placing planks on each side of them.
- Do not surprise or touch anyone who is operating a tool. Startling a tool operator could cause an accident or injury.

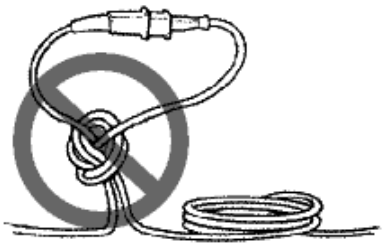

Figure 6.42.—Knots can cause short circuits and shock.

6.9.2 Pneumatic Tools

- Wear safety glasses with side shields or a face shield and, where necessary, safety shoes or boots and hearing protection.
- Remove gloves, rings, watches, and loose clothing.
- Tie back long hair.
- Ensure that the floor around the area is free of oil, grease, and clutter that could create a trip or slip hazard.
- Ensure that the working surface is clean of scraps, tools, and materials.
- Ensure that the compressed air supplied to the tool is clean and dry. Dust, moisture, and corrosive fumes can damage a tool. An in-line regulator filter and lubricator increases tool life.
- Keep tools clean and lubricated, and maintain them according to the manufacturers' instructions.
- Use only the attachments that the manufacturer recommends for the that tools you are using.
- Be careful to prevent hands, feet, or body from injury in case the machine slips or the tool breaks.
- Reduce physical fatigue by supporting heavy tools with a counter-balance wherever possible.

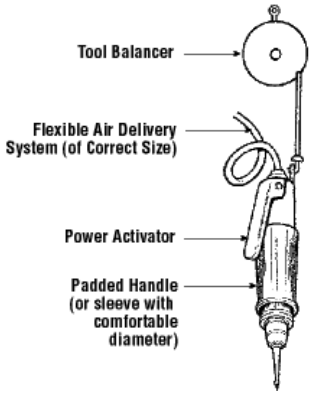

Figure 6.43.—Tool balancers can greatly reduce fatigue.

6.9.2.1 Air Hoses

- Use the proper hose and fittings of the correct diameter.
- Use hoses specifically designed to resist abrasion, cutting, crushing, and failure from continuous flexing.
- Choose air-supply hoses that have a minimum working pressure rating of 150 psig or 150 percent of the maximum pressure produced in the system, whichever is higher.
- Check hoses regularly for cuts, bulges, and abrasions. Tag and replace, if defective.

- Blow out the air line before connecting a tool. Hold the hose firmly and blow away from yourself and others. Never use compressed air to clean or remove debris off one's hair, skin, or clothing.
- Never use compressed air at pressures greater than 30 psi for cleaning purposes.
- Make sure that hose connections fit properly and are equipped with a mechanical means of securing the connection (e.g., chain, wire, or positive locking device).
- Install quick disconnects of a pressure-release type rather than a disengagement type. Attach the male end of the connector to the tool, ***not*** the hose.
- Do not operate the tool at a pressure above the manufacturer's rating.
- Turn off the air pressure to the hose and disconnect it from the tool when not in use or when changing power tools.
- Carry a pneumatic tool by its handle not the hose.
- Secure hoses laid across walkways or curled underfoot to avoid trip hazards.

Figure 6.44.—Hold air line away from yourself and others.

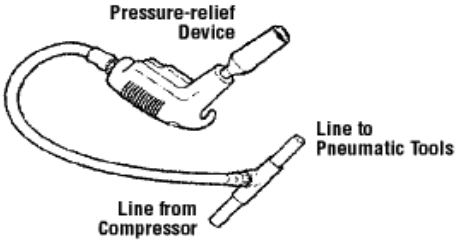

Figure 6.45.—Use quick disconnects of a pressure-release type rather than a disengagement type.

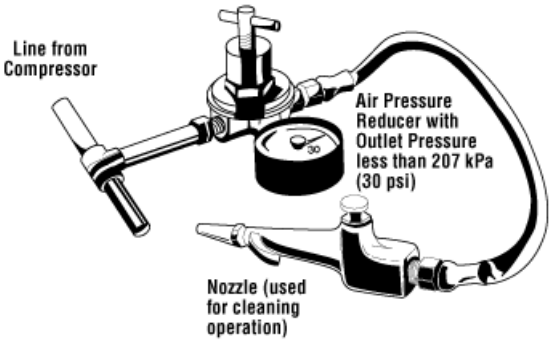

Figure 6.46.—Compressed air used for cleaning purposes must be reduced to less than 30 psi.

6.9.3 Drills

6.9.3.1 Drill Inspection

- Inspect the electrical cords and pneumatic hoses to ensure that they are in a safe condition.
- Follow the manufacturer's instructions when selecting and using a bit or attachment, especially with unfamiliar drills or work.
- Select the bit or attachment suitable for the size of the drill and the work being done.
- Ensure that the bit or attachments are properly seated and tightened in the chuck.
- Use only bits and attachments that turn true.
- Use the auxiliary (second) handle for larger work or continuous operation.

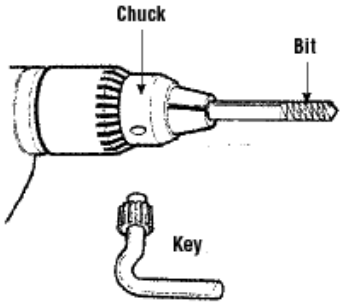

Figure 6.47.—Ensure that bits and attachments are properly seated and tightened in the chuck.

6.9.3.2 Drill Use

- Wear safety glasses with side shields.
- Remove gloves, rings, watches, and loose clothing.
- Tie back long hair.
- Ensure that the floor around the area is free of oil, grease, and clutter that could create a trip or slip hazard.
- Ensure that the working surface is clean of scraps, tools, and materials.
- Keep drill air vents clear to maintain adequate ventilation.
- Keep drill bits sharp.
- Keep all cords clear of the cutting area during use.
- Disconnect the power supply before changing or adjusting the bit or attachments.
- Tighten the chuck securely. Remove the chuck key before starting the drill.
- Secure the workpiece being drilled to prevent movement.
- Slow the rate of feed just before breaking through the surface.
- Drill a small “pilot” hole before drilling large holes.
- Always drill a pilot hole before using a hole saw cutter.
- Use lubrication when using high-speed steel bits.
- Do not attempt to free a jammed bit by starting and stopping the drill. Unplug the drill and then remove the bit from the workpiece.
- Do not reach under or around stock being drilled.
- Always keep proper footing and balance using caution not to over reach.
- Do not use electrical drills in wet or muddy locations. Use a battery-powered drill instead.
- Do not use excessive force to drill into hard material. Reduce drill speed if possible.

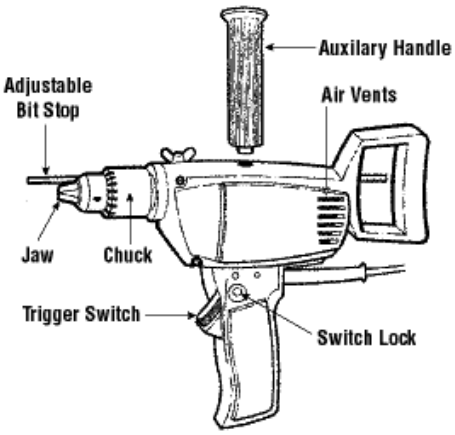

Figure 6.48.—Drill components.

6.9.4 Hand Grinders

6.9.4.1 Hand Grinder Inspection

- Inspect the electrical cords and pneumatic hoses to ensure that the grinder is in a safe condition.
- Connect electrical cords and hoses so that they do not create a trip hazard. Electrical cords must be plugged into a GFCI adapter. If the cord or hose must extend into a pedestrian walkway, it must be secured to the floor.
- Ensure that the guard is secured to the grinder.
- Inspect the grinding wheel for quality and safety (used grinding wheels must be discarded in the proper receptacle for grinding wheels).
- Check that the wheel speed marked on the wheel is equal to or greater than the maximum speed of the grinder.
- Don vibration-resistant gloves, safety glasses with side shields, a half-mask respirator with HEPA filters, a face shield, and hearing protection.
- Remove gloves, rings, watches, and loose clothing. Tie back long hair.
- Ensure that the floor around the area is free of oil, grease, and clutter that could create a trip or slip hazard.
- Ensure that the working surface is clean of scraps, tools, and materials.
- Turn on ceiling exhaust fans.
- Ensure that the wheel has completely stopped rotating before laying the grinder down.
- When finished or when walking away from the grinder, disconnect the electrical cord and pneumatic hose.
- Discard grinding, sanding, and cutoff disks in a container marked “sanding belts/disks,” not with general garbage.

6.9.4.2 Mounting Wheels on Hand Grinders

6.9.4.2.1 Wheel Inspection

Inspect and conduct “a ring test” before mounting a wheel: Tap wheel gently with a nonmetallic tool such as a plastic screwdriver handle or wooden mallet. A wheel in good condition will emit a metallic ring. Reject any a wheel that sounds dead or cracked.

Check the flanges for distortion or abrasion. When flanges are distorted or warped, the contact area is reduced.

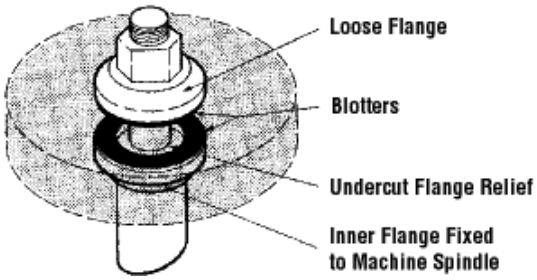

Figure 6.49.—Straight grinder wheel.

6.9.4.2.2 Mounting Straight Wheels

- Ensure that the flanges are not reversed.
- Use blotters to cushion the flange pressure.
- Do not use flat washers or other filler materials in place of flanges.
- Use fixed and loose flanges that have the same diameter and have undercut relief. The minimum flange size is one-third of the wheel diameter.

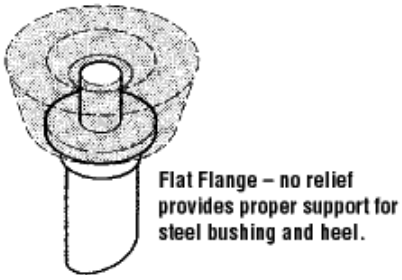

Figure 6.50.—Cup grinder wheel.

6.9.4.2.3 Mounting Cup Wheels

For cup wheels, use a flat, unrelieved flange with a threaded hole mounting.
This flange prevents strain on the bond that anchors the bushing to the wheel cup.

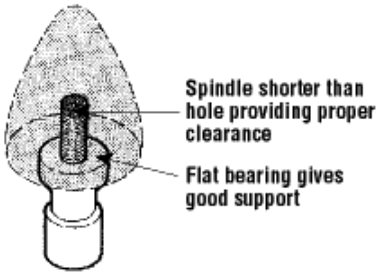

Figure 6.51.—Cone grinder wheel.

6.9.4.2.4 Mounting Cone and Plug Wheels

With cone and plug wheels, breakage commonly occurs when the spindle threads are either too short or too long for the tapped hole in the wheel.

6.9.4.2.5 Mounting Depressed-Center Wheels

- Replace any worn or bent reusable adapters. A damaged adapter will not mount properly.
- Ensure that the grinder spindle shoulder runs true. The adapter must tighten against this shoulder. Use the spacers provided with adapters if the spindle is too long.
- The wheel will wobble if the shoulder is not square with the spindle or if the adapter does not tighten against the shoulder. This can result in wheel breakage and injuries to the operator or a nearby worker.

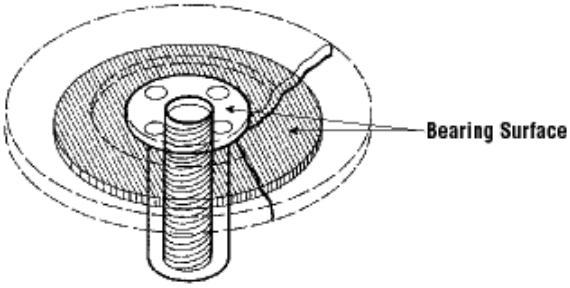

Figure 6.52.—Use suitable adapters to mount depressed center wheels to prevent the wheel from breaking apart.

6.9.5 Magnetic Drills

6.9.5.1 Magnetic Drill Inspection

- Inspect the electrical cords and pneumatic hoses on the drill to ensure that it is in a safe condition.
- Ensure that the drill is unplugged when changing the bit to prevent accidental start up. The only exception is if the drill is currently vertically mounted.
- Inspect the drill bit for quality and safety.
- Ensure that the drill bit is secured into the drill.
- To ensure ideal contact, make sure that the magnetic base is clean while the magnet is turned off.
- To ensure ideal contact, make sure that the mounting surface is clean.
- Ensure that the drill will be plugged into a 115-V, 50- to 60-Hz, three-prong outlet.
- Connect electrical cords and hoses so that they do not create a trip hazard. If the cord or hose must extend into a pedestrian walkway, secure it to the floor.
- Don safety glasses with side shields.
- Before using the drill, secure long hair, remove jewelry, and tape down or remove loose clothing.
- Ensure that the floor around the saw is free of oil, grease, and clutter that could create a trip or slip hazard.
- Ensure that the working surface is clean of scraps, tools, and materials.
- Ensure that the magnetic drill will not be used on the same workpiece as welding is occurring.
- Ensure that no combustible or flammable materials are in the area per NASA C–7b.
- When vertically mounting the drill, ensure that a secondary means—such as clamps, vises, or slings—are used to secure it to the mounting surface in case of a power outage or an improperly prepared surface.
- Ensure that the attachment (magnets and secondary means) are disengaged before attempting to move the drill.
- When finished or when walking away from the drill, disconnect the electrical cord and pneumatic hose.

6.9.6 Saws

Cold-cutting saws include hand and powered hacksaws, band saws, and horizontal and vertical circular saws. Hot-cutting saws use an abrasive disc or large toothless (friction) circular saw.

6.9.6.1 Saw Setup

- Wear safety glasses with side shields.
- Ensure that the saw has a start/stop button within easy reach of the operator.
- Ensure that all guards are in place and working properly.
- Guard long material at both ends to prevent anyone from coming into contact with it.
- Ensure that saw blades are clean and sharp.
- Check blades regularly for wear or damage.
- Select the correct blade and saw speed for the material being cut.
- Ensure that the floor around the saw is free of oil, grease, and clutter that could create a trip or slip hazard.
- Ensure that the working surface is clean of scraps, tools, and materials.
- Keep loose clothing away from the cutting area.
- Do not wear jewelry.
- Tie hair back.

6.9.6.2 Saw Use

- Ensure that the blade is completely stopped before removing the stock.
- Use cutting or lubricating fluid when cutting metals.
- Use the stop gauge (if available) when several pieces of the same length are required.
- Support long stock with a floor stand.
- Keep working surface clean of scraps, tools, and materials.
- Keep the floor around the saw free of oil, grease, and debris.
- Attend the saw the entire time that it is operating.

6.9.6.3 Hot Saws

In addition to the requirements in Sections 6.9.6.1 and 6.9.6.2, hot saws have the following requirements:

- Wear glasses with side shields as well as hearing protection.
- Inspect all wheels for possible damage before mounting.
- Check the machine speed against the maximum safe operating speed marked on the wheel.
- Ensure that mounting flanges are equal and have the correct diameter (at least one-fourth of the wheel diameter).
- Use mounting blotters when they are supplied with the wheels.
- Clamp work firmly in place when using nonreinforced cutoff wheels.
- Use a properly designed safety guard covering at least one-half of the grinding wheel.
- Allow mounted wheels to run at operating speed, with guards in place, for 1 min before cutting.

- Bring the wheel into contact with the work without bumping on impact.
- Turn off the coolant before stopping the wheel to avoid an out-of-balance condition.

6.9.6.4 Circular Saws

6.9.6.4.1 Circular Saw Setup

- Wear safety glasses with side shields, hearing protection, and work gloves.
- Remove gloves, rings, watches, and loose clothing.
- Tie back long hair.
- Ensure that the floor around the saw is free of oil, grease, and clutter that could create a trip or slip hazard.
- Ensure that the working surface is clean of scraps, tools, and materials.
- Check the retracting lower blade guard to ensure that it works freely. It must enclose the teeth as completely as possible and cover the unused portion of the blade when cutting.
- Ensure that the blade that you have selected is sharp enough to do the job. Sharp blades work better and are safer.
- Check the saw for proper blade rotation.
- Set the depth of the blade while the saw is unplugged, and lock it at a depth so that the lowest tooth does not extend more than about 0.3 cm or 1/8 in. beneath the wood.
- Keep all cords clear of the cutting area.
- Check for obstructions or other objects such as nails and screws in the material before cutting.

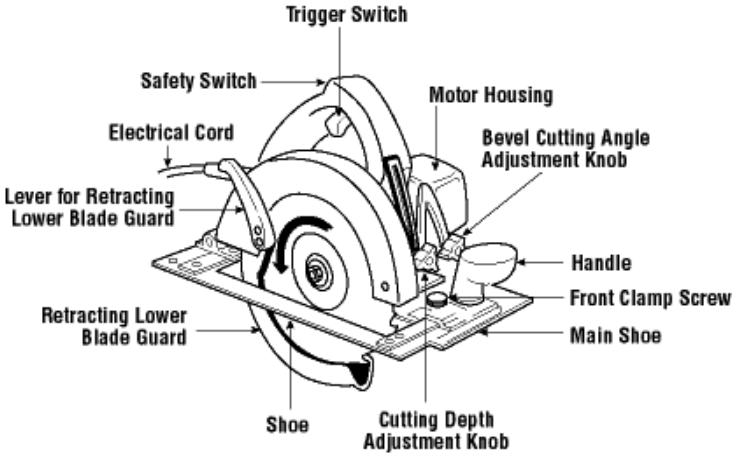

Figure 6.53.—Circular saw.

6.9.6.4.2 Circular Saw Use

- Keep the upper and retracting lower blade guard clean and free of sawdust.
- Disconnect the power supply before adjusting or changing the blade.
- Ensure that the path of the blade will not strike or cut unintended objects.
- Allow the saw to reach full power before starting to cut.
- Use two hands to operate saws—one on a trigger switch and the other on a front knob handle.

- Keep the motor free from accumulating dust and chips.
- Select the correct blade for the stock being cut and allow it to cut steadily. Do not force it.
- Secure the stock being cut to avoid movement.
- Do not overtighten the blade-locking nut.
- Do not twist the saw to change, cut, or check alignment.
- Carry the saw with fingers away from the trigger switch.
- Do not overreach. Keep proper footing and balance.
- Use a wedge or guide clamped or nailed to the stock when ripping.
- Allow the saw to stop completely before setting it down.
- When finished, check to ensure that the retracting lower blade guard has returned to its starting position before laying down the saw.

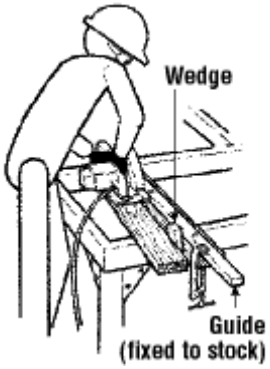

Figure 6.54.—Use a wedge or guide clamped to the stock to rip lumber with a circular saw.

6.9.6.5 Saber, Jig, and Reciprocating Saws

6.9.6.5.1 Saber, Jig, and Reciprocating Saw Setup

- Wear safety glasses with side shields and hearing protection.
- Remove gloves, rings, watches, and loose clothing. Tie back long hair.
- Ensure that the floor around the saw is free of oil, grease, and clutter that could create a trip or slip hazard.
- Ensure that the working surface is clean of scraps, tools, and materials.
- Disconnect the power supply before changing or adjusting blades.
- Use lubricants when cutting metals.
- Keep all cords clear of the cutting area.
- Position the saw beside the material before cutting, and avoid entering the cut with a moving blade.
- Ensure that guards, if present, are installed and are working properly.

6.9.6.5.2 Saber, Jig, and Reciprocating Saw Use

- Hold reciprocating saw with both hands.
- Remember that saber saws cut on the up stroke.
- Secure and support stock as close as possible to the cutting line to avoid vibration.
- Keep the base, or shoe, of the saw in firm contact with the stock being cut.
- Select the correct blade for the material being cut and allow it to cut steadily. Do not force it. Clean, sharp blades operate best.
- Set the blade to go no further than 1/8 to 1/4 in. deeper than the material being cut.
- Begin cutting once the saw reaches its full power.
- Do not force a saw along or around a curve. Allow the machine to turn with ease.
- Insert a blade into and withdraw a blade out of a cut or lead hole while the blade is not moving.
- Do not put down a saw until the motor has stopped.
- Do not reach under or around the stock being cut.

6.9.6.5.3 Starting an Outside Cut

- Place the front of the shoe on the stock.
- Ensure that the blade is not in contact with the material, or the saw will stall when the motor starts.
- Hold the saw firmly down against the material and switch the saw on.
- Feed the blade slowly into the stock maintaining an even forward pressure.

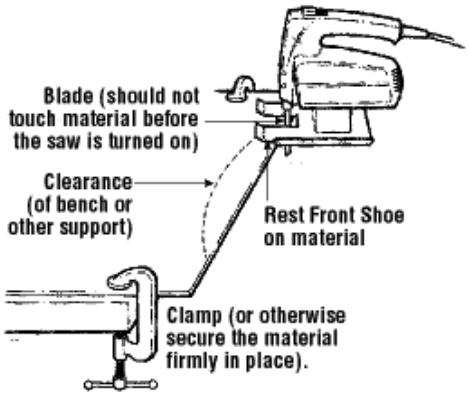

Figure 6.55.—Starting an outside cut.

6.9.6.5.4 Starting an Inside Cut

- Drill a lead hole slightly larger than the saw blade. With the saw switched off, insert the blade in the hole until the shoe rests firmly on the stock.
- Do not let the blade touch the stock until the saw has been switched on and reaches full power.

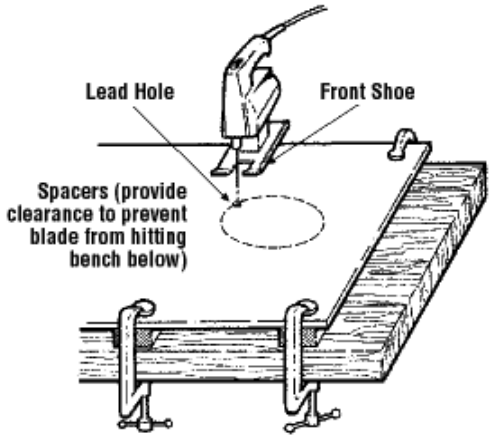

Figure 6.56.—Starting an inside cut.

6.9.7 Surface Grinders

6.9.7.1 Surface Grinder Setup

- Wear safety glasses with side shields and hearing protection.
- Remove gloves, rings, watches, and loose clothing.
- Tie back long hair.
- Ensure that the floor around the area is free of oil, grease, and clutter that could create a trip or slip hazard.
- Ensure that the working surface is clean of scraps, tools, and materials.
- Ensure that the grinder has a start/stop button within easy reach of the operator.
- Check the grinding wheel before mounting it. Ensure that it is properly maintained and in good working order.
- Ensure that the face of the wheel is evenly dressed.
- Ensure that the wheel guard covers at least one half of the grinding wheel.
- File off any burrs on the surface of work that is placed on the magnetic chuck.
- Clean the magnetic chuck with a cloth.

6.9.7.2 Surface Grinder Use

- Place a piece of paper slightly larger than workpiece in the center of the chuck.
- Position work on the paper and turn on the power to the magnetic chuck.
- Check that the magnetic chuck has been turned on by trying to remove work from the chuck.
- Check that the wheel clears the work before starting the grinder.
- Stand to one side of the wheel before starting the grinder.
- Run a new grinding wheel for about 1 min before engaging the wheel into the work.
- Turn off coolant before stopping the wheel to avoid creating an out-of-balance condition.
- Ensure that the grinding wheel is running the speed recommended on the wheel.

- Ensure that the wheel has completely stopped before attempting to clean the magnetic chuck or to mount or remove work.

6.9 Verification of compliance with these requirements is done by SHeD during periodic evaluation and assessments.

- Only grind material that the wheel was designed for.
- Slowly apply work to a cold wheel or disk.
- Do not reach above or around a moving wheel.

6.10 Policies and Procedures for Spraying Paint or Combustible Liquids

(*29 CFR 1910.107Subpart H Hazardous Materials, National Fire Protection Association (NFPA) 33*)

All spraying of parts or material shall be done in the approved ventilated spray booth or hood whenever possible. Operations that must take place outside of a spray paint booth must have safety and health approval to ensure that the proper controls are in place to prevent employee health risks, flammable atmosphere conditions, and environmental impact outside of NASAs air permit allowances.

Hot work shall not be permitted in any area where spray painting is done.

6.10.1 Ventilated Spray Hoods

The ventilated spray paint hoods must have been inspected by SHeD within the past 12 months. The hood must be able to perform at a level that allows it to remove combustible or toxic vapors and to prevent accumulation of explosive or flammable mixtures in the air. The ventilation system shall be in operation at all times when paint or combustible liquids are being sprayed and for a reasonable time thereafter to ensure evacuation of all vapors. Filters must be maintained and replaced as required to prevent excessive paint buildup.

- Areas in and around spray booths and hoods shall be kept free of combustible deposits on floors, walls, and ceilings.

6.10.2 Ventilated Spray Booths

Spray booths and other locations regularly used for spraying paint or combustible liquids shall be ventilated to remove combustible or toxic vapors and to prevent the accumulation of explosive or flammable mixtures in the air. The ventilation system shall be in operation at all times when paint or combustible liquids are being sprayed and for a reasonable time thereafter to ensure the evacuation of all vapors. Filters must be maintained and replaced as required to prevent excessive paint buildup. Electrical equipment used in conjunction with spray booths shall conform to NFPA 70, National Electric Code, Class 1, Group D, and shall be located where not subject to deposits of combustible residues. All electrical equipment used within 20 feet of the opening of the spray booth shall comply with the state code and the NFPA 70, Class 1, Group D, Division 2, for outside booth use, or Class 1, Group D.1, for inside booth use.

All personnel shall wear industrial-hygienist-approved respirators when spray painting outside of a spray hood or in a booth unless otherwise state by an industrial hygienist. Personnel must be in full compliance with the requirements in the Respiratory Protection Program, Chapter 4 of GRC's Occupational Health Programs Manual.

- Areas in and around spray booths and hoods shall be kept free of combustible deposits on floors, walls, and ceilings.
- Spray booths shall be equipped with an NFPA-approved sprinkler system per 29 CFR 1910.107. paragraphs (c)(6)(i) and (h)(12).
- Areas in and around spray booths and hoods shall be kept free of combustible deposits on floors, walls, and ceilings.
- Only authorized personnel shall be in the spray booth during spray painting.
- All equipment in the spray booth that may generate static electricity shall be grounded.

- Before any repair to the spray booth is undertaken involving the use of torches, electric arcs, or other sources of ignition, approval shall be obtained from SHeD and area safety committee chair.

6.10.3 Spraying Outside of a Hood or Booth

6.10 Verification of compliance with these requirements is done by SHeD during periodic evaluation and assessments.

Anytime that extensive spraying outside of a spray booth becomes necessary, such work shall be done when the area is clear of all employees not engaged in the spraying operation. The surrounding area must be protected to prevent overspray from damaging adjacent property. All personnel shall wear industrial-hygienist-approved respirators when spray painting outside of a spray hood or in a booth unless otherwise stated by an industrial hygienist. Personnel must be in full compliance with the requirements in Chapter 4.

- Areas in and around spray booths and hoods shall be kept free of combustible deposits on floors, walls, and ceilings.
- No source of ignition shall be permitted in any area where combustible materials are being sprayed.
- Spraying shall be done only in approved areas where adequate fire extinguishing equipment is immediately available.

7.0 RECORDS

- NASA GRC40 NASA Glenn Research On-the-Job Training (OJT).—Maintained by the supervisor.

8.0 REFERENCES

Benson, Steve: Brake Line: Press Brakes and More: Planning to Cut Corners on Safety?" The Fabricator.com February 19, 2001. (Section 6.6.6 and its subsections were derived from this reference.)

Document number	Document name
29 CFR 1910 Subpart D	Walking-Working Surfaces
1910.22	General Requirements
1910.23	Guarding Floor and Wall Openings and Holes
1910.24	Fixed Industrial Stairs
1910.25	Portable Wood Ladders
1910.26	Portable Metal Ladders
1910.27	Fixed Ladders
1910.28	Safety Requirements for Scaffolding
29 CFR 1910 Subpart G	Occupational Health and Environmental Control
1910.94	Ventilation
1910.95	Occupational Noise Exposure
29 CFR 1910 Subpart H	Hazardous Materials
1910.106	Flammable and Combustible Liquids
1910.107	Spray Finishing Using Flammable and Combustible Materials
29 CFR 1910 Subpart I	Personal Protective Equipment
1910.132	General Requirements
1910.133	Eye and Face Protection
1910.134	Respiratory Protection
1910.135	Head Protection
1910.136	Occupational Foot Protection
1910.138	Hand Protection
29 CFR 1910 Subpart N	Materials Handling and Storage
1910.178	Powered Industrial Trucks

1910.184	Slings
29 CFR 1910 Subpart O	Machinery and Machine Guarding
1910.211	Definitions
1910.212	General Requirements for All Machines
1910.215	Abrasive Wheel Machinery
29 CFR 1910 Subpart P	Hand and Portable Powered Tools and Other Hand-Held Equipment
1910.241	Definitions
1910.242	Hand and Portable Powered Tools and Equipment, General
1910.243	Guarding of Portable Powered Tools
1910.244	Other Portable Tools and Equipment
29 CFR 1910 Subpart Q	Welding, Cutting, and Brazing
1910.251	Definitions
1910.252	General Requirements
1910.253	Oxygen-Fuel Gas Welding and Cutting
1910.254	Arc Welding and Cutting
1910.255	Resistance Welding
NASA-STD-8719.9	Standard for Lifting Devices and Equipment
NPR 8715.3C	NASA Procedural Requirement, NASA General Safety Program Requirements
NPD 1800.1C	NASA Policy Directive, NASA Occupational Health Program Procedures
GLM-QS-1800.1	GRC, Occupational Health Programs Manual
Chapter 3	Hearing Conservation Program
Chapter 4	Respiratory Protection Program
Chapter 7	Local Exhaust Ventilation (LEV)
GLM-QS-1700.1	GRC, Glenn Safety Manual
Chapter 15	Personal Protective Equipment
Chapter 20	Lifting Devices and Equipment
Chapter 21	Mishap and Close Call Reporting, Investigating, and Recordkeeping
Chapter 22	The Glenn Buddy System
Chapter 28	Hot Work Authority
Chapter 34	Fall Protection

APPENDIX A.—DEFINITIONS AND ACRONYMS

Code of Federal Regulations (CFR)

Glenn Manual (GLM)

Glenn Research Center (GRC)

Ground fault circuit interrupter (GFCI)

High-efficiency particulate air (HEPA)

Incident Reporting Information System (IRIS)

NASA Policy Directive (NPD)

NASA Procedural Requirement (NPR)

National Fire Protection Association (NFPA)

Occupational Safety and Health Administration (OSHA)

Safety and Health Division (SHeD)