43rd AIAA/ASME/SAE/ASEE Joint Propulsion Conference & Exhibit
8 - 11 July 2007, Cincinnati, OH

AIAA 2007-5856

NEXT Ion Propulsion System Production Readiness

W. Andrew Hoskins,* Randall S. Aadland,† Nicole J. Meckel,‡ Leonard A. Talerico§ and Jeffrey M. Monheiser¶
Aerojet, Redmond, Washington, 98073-9709

The objectives of the NASA's Evolutionary Xenon Thruster (NEXT) program are to develop a next generation ion propulsion system to Technology Readiness Level 6 and to transfer the NASA technology to industry partners to facilitate the manufacturing of future flight systems. A primary focus of the program is to minimize first user cost of the system through a flexible system design approach, manufacturing process development, and element and system validation. The NEXT program has made significant progress towards these goals in the last 18 months. With the fabrication and qualification-level testing of engineering and prototype model hardware, a substantial level of technical and production readiness has been demonstrated. This paper describes the development and validation status of each of five system elements, summarizes performance and interface characteristics for each element, and details Aerojet's readiness to manufacture the flight system.

Nomenclature

DCIU	=	Digital Control Interface Unit
ELT	=	Extended Life Test
EM	=	Engineering Model
GRC	=	Glenn Research Center
HPA	=	High Pressure Assembly
IPS	=	Ion Propulsion System
IPT	=	Integrated Product Team
ISPT	=	In-Space Propulsion Technology
JPL	=	Jet Propulsion Laboratory
L-3ETI	=	L-3 Communications Electron Technologies, Inc.
LDT	=	Long Duration Test
LPA	=	Low Pressure Assembly
NEXT	=	NASA's Evolutionary Xenon Thruster
NSTAR	=	NASA Solar electric propulsion Technology Applications Readiness
PM	=	Prototype Model
PMS	=	Propellant Management System
PPU	=	Power Processing Unit
TRL	=	Technology Readiness Level
SOA	=	State Of the Art

I. Introduction

NASA's Evolutionary Xenon Thruster (NEXT) ion propulsion system (IPS) will provide significant mission benefits in terms of larger payloads and smaller launch vehicles for a wide range of future missions, including Discovery-class and Mars Sample Return, and especially New Frontiers-class and Flagship outer planet missions. Building on the success of the state of the art NASA Solar Electric Propulsion Technology Applications Readiness (NSTAR) system used on Deep Space One[1] and slated for launch in 2007 on Dawn,[2] each element of the NEXT

* Technical Principal/Thruster Co-I, Systems & Tech Development Dept., PO Box 97009, senior member.
† Senior Project Engineer/PMS Co-I, Systems & Tech Development Dept., PO Box 97009.
‡ Program Manager, Systems & Tech Development Dept., PO Box 97009.
§ Project Engineer, Systems & Tech Development Dept., PO Box 97009.
¶ Senior Project Engineer, Systems & Tech Development Dept., PO Box 97009.
Aerojet clearance 2007-014

Copyright © 2007 by Aerojet-General Corp. Published by the American Institute of Aeronautics and Astronautics, Inc., with permission.

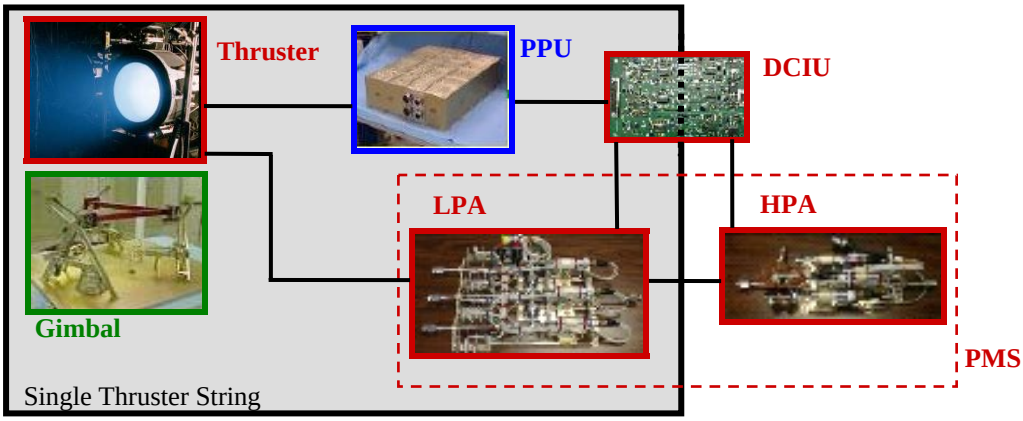

- Fabricated by Aerojet
- Fabricated by L-3ETI
- Fabricated by JPL/Swales Aerospace

Figure 1. NEXT Ion Propulsion System.

system has demonstrated significantly improved performance and capability. In addition, the NEXT elements have been designed to enable a modular approach to systems design for mission flexibility. The system can be configured with one or multiple thruster strings, and the modular power processor design can enable a wide variety of power ranges. This system design flexibility, combined with a high level of technology and manufacturing readiness, translates into low development costs for future flight applications.

The five elements being developed under the NEXT are the thruster, xenon Propellant Management System (PMS), Power Processing Unit (PPU), Digital Control Interface Unit (DCIU), and gimbal (Figure 1). The PMS is divided into one High Pressure Assembly (HPA) per spacecraft and a dedicated Low Pressure Assembly (LPA) for each thruster. The DCIU functionality serves as the interface between the spacecraft, the PPU and the PMS components. Each thruster string is comprised of a thruster, gimbal, power processor, and PMS low pressure assembly, along with associated DCIU functionality. One HPA and its DCIU functionality can support one or multiple thruster strings. The sections below include a summary of the design characteristics for each of the five main system elements.

The NEXT project is led by NASA Glenn Research Center (GRC), under the NASA Science Mission Directorate In-Space Propulsion Technology (ISPT) project. The NEXT team also includes the Jet Propulsion Laboratory (JPL), L-3 Communications Electron Technologies Inc. (L-3ETI), and Aerojet. The objectives of the NEXT project are to develop the ion propulsion system to a Technology Readiness Level 6 (TRL6), which requires system level validation in relevant environments, and to transfer the NASA technology to industry partners to facilitate the manufacturing of future flight systems. The project is organized around Integrated Product Teams (IPTs) for each of the system elements, where each teammate is involved in the development of each element. The intent is to ensure that each industry partner is capable of producing each element of the system for flight. In the second phase of the program, the industrial partners have been responsible for design and manufacture of the main system elements. Aerojet is responsible for the Prototype Model (PM) thruster, the Engineering Model (EM) Propellant Management System (PMS), and the software and laboratory hardware for the DCIU simulator. L3-ETI is responsible for the EM Power Processing Unit (PPU). Swales Aerospace, under subcontract to JPL, was responsible for the gimbal. GRC and JPL have primary responsibility for modeling and the extensive program of validation testing.

The total impulse recently demonstrated and projected for the NEXT thruster put it well into the league of some of the largest primary spacecraft propulsion systems available. The projected impulse before failure of >30 MN-s for a single NEXT thruster[3] would allow for a qualified service life of over twice the total impulse provided by the entire 3100 kg of propellant on board the Cassini spacecraft.[4] Of course, electric propulsion is only appropriate for selected maneuvers, but if even a quarter of that mission's impulse were provided by a NEXT system, for example, to do the first major deep space maneuver, over 600 kg of propellant would have been saved. This maneuver represents only a third of the impulse demonstrated to date on a NEXT thruster, and the mass savings include a fully redundant NEXT string. Detailed mission analyses have shown NEXT to be mission-enabling for some prospective New Frontiers- and Flagship-class missions. NEXT has also been shown to yield more payload with fewer thruster strings than the NSTAR SOA for several Discovery-class missions.[5]

However, for NEXT to be a viable choice in the highly competitive robotic science mission selection process, it must be cost competitive, both in added payload value for large missions and in staying within cost caps for Discovery-class missions. The NEXT team is highly focused on minimizing the first user cost. An assured, acceptable cost to the first user is driven by the non-recurring cost needed to bring the design to TRL6, and also by the readiness of NASA's industrial partners to produce the flight system. This paper will examine both facets, by reviewing the design readiness of each of five major components, while describing Aerojet's involvement in the development of each, and by reviewing Aerojet's readiness to build a flight system.

II. Thruster

A. Design

The NEXT ion thruster represents a significant improvement over the State of the Art (SOA) NSTAR thruster. In Phase I, NASA GRC developed the Engineering Model (EM) thruster, combining features with heritage from NSTAR and the Space Station Plasma Contactor with advanced optics, discharge chamber, and discharge cathode designs.[6] The core of the neutralizer design is essentially identical to the Plasma Contactor. GRC built and tested a total of five EM thrusters to validate the performance improvements listed in Table 1.

Table 1. Performance summary of NSTAR SOA and NEXT thrusters.

Peformance parameter	NSTAR SOA[2,3]	NEXT[1]
Input Power Range, kW	2.3	6.9
Input Power Throttle Range	5:1	12:1
Maximum Thrust, mN	92	236
Maximum Specific Impulse, s	3,185	4,190
Thruster Efficiency at Full Power, %	62	71
Propellant Throughput, kg	235#	>207,# >730**
Total Impulse, MN-s	6.9#	>7.5,# >30**
Specific Mass, kg/kW	3.6	1.8

total actual demonstrated; ** total projected; qualified service life would be 2/3 these values,

Aerojet's role in Phase II was to upgrade the EM design to survive launch and thermal environments, while minimizing mass, improving manufacturability, and most importantly, preserving the life and performance characteristics of the EM thruster. This last design goal was achieved through an intensive technology transfer process from GRC to Aerojet for key design and fabrication details. Essentially, all surfaces in contact with plasma, as well as key insulators and propellant isolators, have material and dimensions identical to that of the EM design. The resulting Prototype Model (PM) design, created by Aerojet in close coordination with GRC, improves on the EM design in several critical areas (Figure 2).[7] The design was thoroughly reviewed by the thruster Integrated Product Team (IPT) and a panel of independent reviewers.

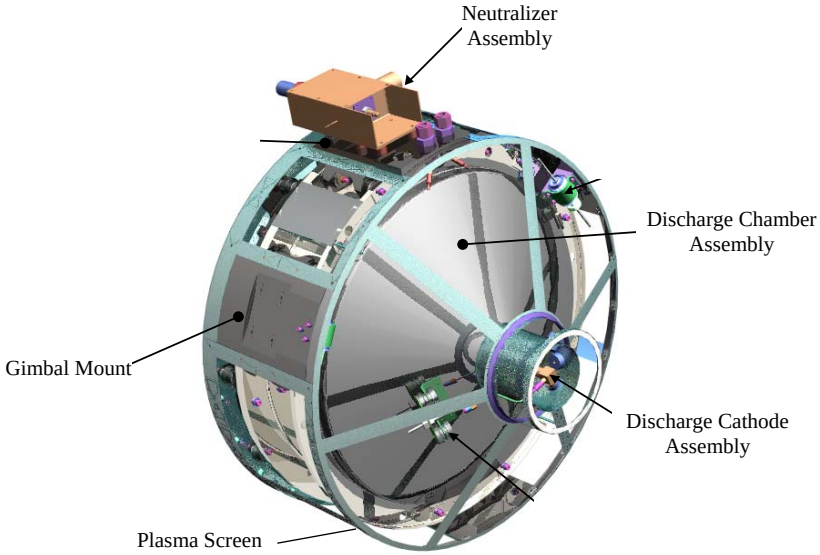

NEXT EM to PM Design Improvements

Optics Assembly
- Electrode etch
- Detailed mounting design
- Alignment process

Cathodes
- Discharge cathode keeper material
- Discharge cathode emitter retention
- Mounting design

Thruster structural
- Discharge chamber shell material & design
- Gimbal mount design
- Plasma screen material and design

Thruster thermal
- External emissivity coatings
- Wiring harness design and installation

Figure 2. NEXT Prototype Model Thruster Design.

Several improvements to the optics and cathodes were made to address key thruster wear mechanisms. A new etch vendor developed in Phase II produced optics grid electrodes with a significantly more consistent hole size and cusp that helps to control accelerator aperture erosion. Changes to the optics mounting design were made to stabilize grid gap and alignment. Gap reduction contributed to electron backstreaming that was a factor in ending the NSTAR Extended Life Test (ELT) and was considered a significant new life limitation mode.[8] Other changes to the optics assembly greatly improved the repeatability and speed of the grid gapping and alignment operation (Figure 3). Changes to the neutralizer include thickening the keeper wall to address erosion noted in wear tests and significant stiffening of the mount design. A brazed graphite keeper design was developed for the discharge cathode to address the significant keeper orifice plate erosion seen in the NSTAR ELT (Figure 4).

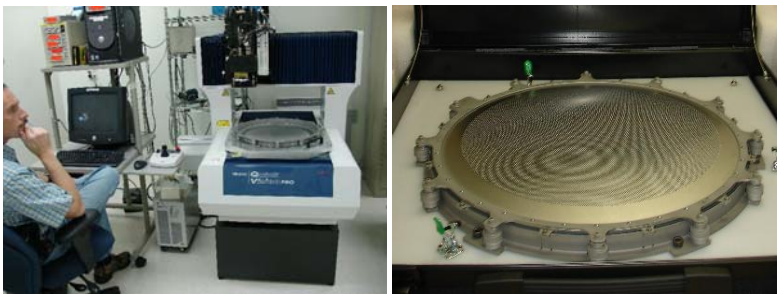

Figure 3. PM Ion Optics Alignment; First Assembly (S/N 020).

Other changes in the PM design focused on improving the structural and thermal capability of the thruster. The overall approach to the structural design tightly integrates the gimbal mount to the discharge chamber and optics assembly for a stiffer, lighter thruster while eliminating a difficult to tolerance and fabricate spun-formed interface. The gimbal mount design has a low radial profile that allows close placement of multiple thrusters. The new plasma screen configuration allows access to all parts of the thruster without removing from the handling fixture, improving manufacturability. An innovative emissivity coating greatly increases thermal rejection, improving tolerance of harsh thermal radiative environments and high power operation, such as during a Venus gravity assist. The harness design avoids the electrical failure experienced initially on the NSTAR unit by isolating the wires from the hot discharge chamber surfaces and making them continuous through the plasma screen to a remote high voltage connector that can be maintained at acceptable temperatures.

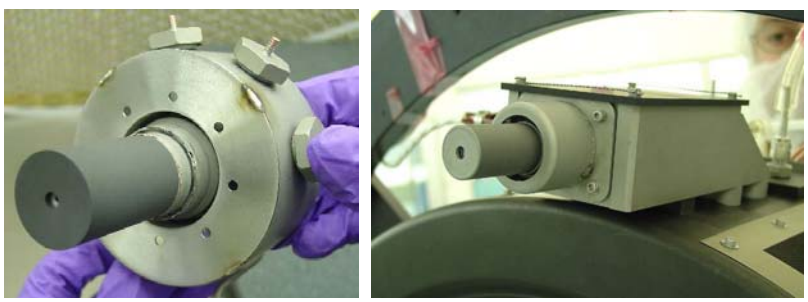

Figure 4. PM Discharge Cathode and Neutralizer.

A summary of characteristics of the thruster design is given in Table 2. An abbreviated throttle table is given in Table 3. Detailed throttle parameters, such as flow rates, can be found in reference 6. High power and high thrust-to-power extensions of the throttle table are given in reference 3.

Table 2. NEXT ion thruster characteristics.

Mass, kg	12.7 excluding harness 13.5 with current harness	
Envelope, cm	58 dia. x 44 length (incl. neutralizer) 52.5 dia. (discharge chamber only)	
Total Power, W	540 – 6860 (see throttle table)	
Mechanical interface, cm	3 flat mount surfaces, 6.4 x 9 each, 25.7 from thruster center line, spaced 120°equally around discharge chamber	
Electrical Interface	Neutralizer	2 m harness (3 lines) with D38999/20FD5PN connector
	Thruster	2 m harness (7 lines) with Modified D38999/20FJ8BN
Propellant Interface	Neutralizer	1/4” Omnisafe fitting
	Cathode	1/8” Omnisafe fitting
	Main	1/8” Omnisafe fitting
Thermal Interface	* No conducted or radiative dissipation to spacecraft required * Compatible w/ adiabatic enclosure at sides & back of thruster * Compatible with Venus gravity assist solar loading	
Structural capability	Static	35 g design
	Random Vib.	10.0 g_{rms} qualification
	Pyroshock	1500 g peak

B. Fabrication and Validation

In March of 2005, Aerojet delivered the first PM optics assembly (Figure 3) to GRC for installation on the EM3 thruster. After acceptance tests demonstrating performance identical to the EM optics, this thruster/optics assembly was put into a Long Duration Test (LDT) at GRC. To date, the thruster has undergone operation at full power for over 10,100 hours, exceeding the total impulse of the NSTAR ELT.[9,10] Measurements have detected no accelerator grid aperture enlargement at full power, grid gap reduction, or cathode keeper orifice erosion. Elimination of these as dominant wear mechanisms allows the projection for total impulse before thruster failure of ~30 MN-s, based on structural failure of the accelerator electrode.[3]

Table 3. Abbreviated NEXT ion thruster throttle table.

Beam Voltage, V	Beam Current, A	Input Power, kW	Thrust Efficiency	Thrust, mN	Specific Impulse, s
1800	3.52	6.86	0.710	237	4190
1179	3.52	4.70	0.680	192	3400
1800	2.00	3.99	0.710	134	4310
1179	2.00	2.75	0.675	108	3490
1800	1.20	2.46	0.642	80.4	4000
1179	1.20	1.71	0.605	65.1	3240
679	1.20	1.13	0.523	49.2	2450
275	1.00	0.55	0.322	25.5	1400

In January of 2006, Aerojet delivered the first PM thruster (PM1) to NASA GRC for initial Performance Acceptance Testing (Figure 5). The thruster duplicated EM specific impulse and efficiency in the first performance test round in the "as received" condition.[9] A single rework was performed on the discharge cathode emitter retention design to decrease thermal conduction and bring cathode ignition times within family. Otherwise, all thruster performance parameters have been within expectation starting with the first test block for the first thruster produced at Aerojet. This significant achievement demonstrated the effectiveness of the NEXT process for transferring critical thruster technology from NASA to industry.

In addition to performance testing, the PM1 thruster underwent thermal development testing, vibration testing in conjunction with the breadboard gimbal, and thermal vacuum testing, all at JPL and all at qualification levels. Overall, these tests demonstrated the high degree of thermal and structural robustness of the PM design, retiring several significant risk items.

Performance testing at GRC demonstrated that the PM design runs 50 to 100 °C cooler than the EM design at full power. The Thermal Development Test[12] at JPL provided critical data for setting thermal vacuum test conditions and validating the high fidelity thermal model created by GRC.[11] With a worst case thruster self heating of 475W and environmental radiative load of 650 W, the thruster still demonstrated at least 67 °C margin below the ratings for all temperature sensitive components, except for the harness outer jacket.[7] The jacket exhibited no noticeable degradation, but the external harness design is under re-evaluation anyway for compliance with gimbal cable flexure requirements. The Thermal Vacuum Test was conducted for two complete cycles with qualification level procedures that bracket the worst case environmental load anticipated for a range of reference missions (Figure 6).[13] The thruster was operated at hot bias (+203 °C reference at gimbal mount) for a total of 4 hours, including a hot restart, each cycle. Cold soak was at -120 °C for 2 hours before a cold start. Aside from known damage to the cathode heater transition joints from the vibration test, the thrusters demonstrated no change in performance.

The vibration test was conducted just prior to the thermal vacuum test with the thruster mated to the NEXT breadboard gimbal (Figure 7).[13] Due to the gimbal's aggressively lightweight design and uniquely small footprint, it tends to amplify accelerations below 200 Hz at the thruster interface. A more conventional gimbal that is heavier and stiffer would be expected to produce less stress on the thruster. The random vibration level at the gimbal base was 10 g_{rms} for 120 s on each axis, encompassing expected environments for Delta II, Delta IV or Atlas V launches. Aside from the test issues addressed below, the thruster exhibited no other damage and no change in performance, grid gap, or magnetic field strength inside the discharge chamber.

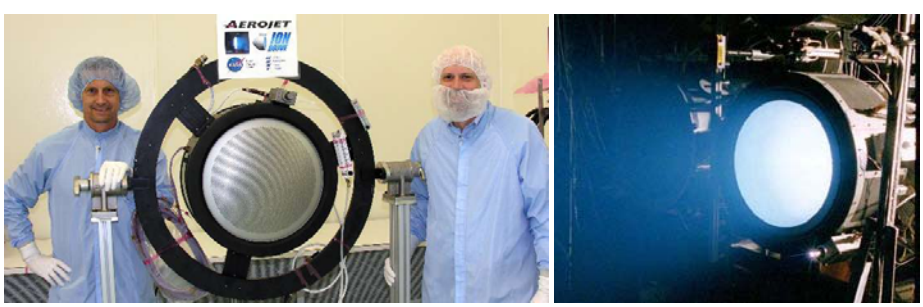

Figure 5. PM1 thruster at Aerojet; In test at NASA GRC.

The NEXT program plan had always anticipated using the test issues uncovered with the PM1 thruster to drive a limited PM design update. The most significant test issue was the failure of the heater transition joints in

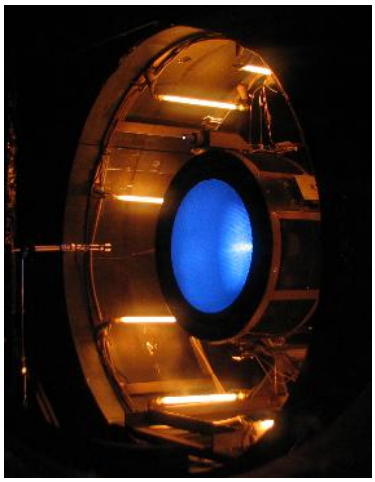

Figure 6. PM1 thruster in thermal vacuum test at JPL.

both the neutralizer and discharge cathodes during vibration. Other test findings were more minor, including three plasma screen fasteners loosening, higher than desired electron backstreaming through the side plasma screens, debris generation, and external harness temperature rating and routing issues.

In early 2007, a PM design update effort was conducted to address these test issues. The primary effort was a re-design of the heater transition and termination, which was returned to more closely copy the details of the proven Space Station Plasma Contactor design. Fastener loosening was addressed with changes to fastener type and torque values. High electron backstreaming, attributed to NEXT's higher beam voltages and ambient plasma densities, was addressed by reducing the open area fraction of the plasma screen, made possible by the ample thermal margin. The resultant decrease in radiative cooling is still expected to leave at least 50°C thermal margin for all components internal to the thruster. All sources of the debris observed after the vibration test have now been addressed by design and process changes, except for the grit blasting of the discharge chamber, which is in work. All PM design updates to address test issues were reviewed by the thruster IPT in February, 2007.

The PM1 thruster was returned to Aerojet for rework to incorporate the PM design updates. In May, 2007, Aerojet delivered to GRC a reworked thruster, designated PM1R, which has now successfully completed Performance Acceptance Testing, demonstrating no change in performance. A second set of cathodes, as well as cathode heaters for component life testing will be delivered to GRC later in GFY07. Other components for a second thruster remain at Aerojet, available for future work, including validation against a specific mission for a first user.

C. Flight Readiness Status

The PM1R thruster will undergo PPU integration testing at GRC, followed by vibration and thermal vacuum testing at JPL in GFY07. This will validate the resolution of all PM1 test issues except for discharge chamber debris generation and the harness issues, which are to be implemented on a future PM thruster. In addition, the PM1R thruster will be integrated with the EM PPU and EM PMS for the Single-string System Integration Test later in 2007, validating the performance of these three main elements in combination. In 2008, the PM1R thruster will participate, along with 2 EM thrusters, in the Multi-string System Integration Test.

The Prototype Model design is intended to be ready for use by an industrial supplier to build flight units "as is" with minimal modifications only as required by validation test issues or user specific requirements. Aerojet is in the process of updating drawings and detailed work instructions to thoroughly document the current PM design. In addition to final resolution of the discharge chamber debris and harness findings, life validation is the most significant effort remaining to mitigate the impact of a traditional qualification life validation on a first user. Life validation is being addressed by the NEXT program with a combination of key component life tests,[14] the long duration test with EM3,[10] and service life analysis.[15] Wear testing with the PM1R thruster or a future life test with a second PM thruster are also possibilities under future ISPT funding.

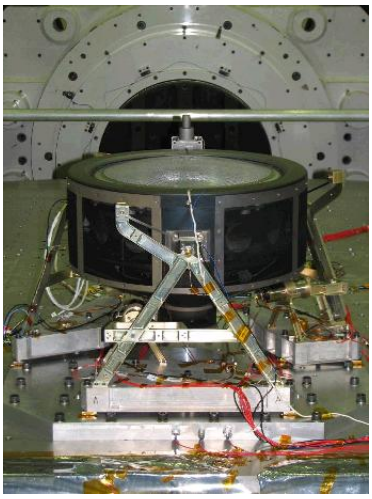

Figure 7. PM1 mated to gimbal on vibration table at JPL.

The PM thruster design has made significant strides in validation in the past 18 months. The testing planned through 2008 will leave the present thruster design in a very high state of readiness for flight use.

III. Propellant Management System

A. Design Approach

The PMS provides independent xenon flow rate control to the thruster main chamber, discharge cathode and neutralizer cathode. The Xenon Feed System (XFS) developed under the NSTAR program for Deep Space One was the first xenon propellant management system flown with an ion engine, establishing the state of the art.[16] Future missions, however, will require propellant management systems with lower mass and volume, as well as increased system flexibility.

The fundamental approach to the NEXT PMS xenon flow rate control uses the combination of a thermal throttle flow control device and a Proportional Flow Control Valve (PFCV). The thermal throttle is flow control device which allows a repeatable flow rate for a given inlet pressure and operating temperature. Its implementation here is based on earlier research done at Aerojet and at JPL. Precise, rapid throttling of flow rate is achieved by active control of the inlet pressure with the PFCV while controlling the operating temperature to a constant set-point. The PFCV completed qualification in 2003 as an integral component of the Xenon Flow Controller used on the Hall Thruster Propulsion System (HTPS), which was developed by Aerojet for Lockheed Martin Space Systems Company for use on geosynchronous satellites.[17] The DCIU provides the signal conditioning, controllers, and power supplies needed to operate the control loops.[18]

With this approach, the NEXT feed system exhibits significantly improved performance and lower mass compared to the NSTAR SOA feed system. By eliminating the bang-bang operated solenoid valves, both the plenum tank and saw-tooth pressure waveform have been eliminated. By elimination of the plenum tanks, throttle rates have been dramatically reduced, as well as system volume and end of life xenon residuals. Table 4 and Figure 8 present summary comparisons between the NEXT PMS and NSTAR XFS.

Table 4. Comparison between NSTAR and NEXT for a fully redundant, single string xenon feed system (not including the xenon propellant tank).

Performance Criteria	**NEXT PMS**	**NSTAR XFS**
Mass (kg)	5.0	11.4
Volume (c.c.)	11,775	27,300
Independent throttling of Main, Cathode & Neutralizer	YES	NO
Throttle Rate (pressure control mode)	< 1 minute	~ 45 minutes
EOL Xenon Residuals (assuming 10.34 MPa @ 25 °C BOL tank pressure)	< 1% BOL	< 2.4% BOL
Plenum Tanks Required	NO	YES

B. Fabrication and Validation

The NEXT PMS is segregated into one High Pressure Assembly (HPA) and Low Pressure Assemblies (LPAs) for each thruster string. The HPA is functionally a redundant, precision pressure regulator that regulates the tank pressure down from as much as 2700 psia typically to 50 psia for input to the LPAs. The LPA controls the three independent flow rates needed for a single thruster. In Phase I, Aerojet developed and delivered a breadboard PMS[19] to GRC in support of the Single String Integration Test (SSIT).[20] The breadboard hardware demonstrated the ability of the approach to stably deliver flow at three independent flow rates to operate a thruster.

In Phase II the EM LPA design transitioned from a single common PFCV to three independent PFCVs, providing fully independent flow ranges for each branch. The LPA design also provides significant redundancy of operation including fully redundant temperature sensor and heater pairs and the ability to operate in a backup temperature controlled mode if a pressure control loop fails. The EM HPA was designed with full parallel redundancy of the pressure control loop (Figure 8). Both assemblies were designed as flight weight hardware with full structural analysis and thermal evaluation. At the end of both phases, the PMS design was subjected to a full design review with the PMS IPT and a panel of independent reviewers.[21] A summary of characteristics for the PMS design are given in Table 5.

A total of two HPAs and three LPAs were fabricated during Phase II using standard Aerojet processes for flight hardware (Figures 9 and 10). In addition, a partial LPA with just the main thruster flow control leg was built and delivered to GRC for incorporation into the Long Duration Test (LDT) of the EM3 thruster and S/N020 Optics.[10] The intent is to evaluate PMS component operational life capability in a ground test environment.

Following final assembly, the two High Pressure Assemblies and three Low Pressure Assemblies were subjected to an extensive test sequence at Aerojet that included functional, calibration, qualification level random vibration and qualification level thermal vacuum testing. All tests have met their objectives with no findings. Details of the test plan are in reference 22.

The hardware has been delivered to GRC where it will be integrated with the PM1R Thruster and EM PPU for the Single-string System Integration Test later in 2007, validating the performance of these three main elements in combination. In 2008, the PMS will be configured for three strings to feed the PM1R thruster and two EM thrusters in the Multi-string System Integration Test.

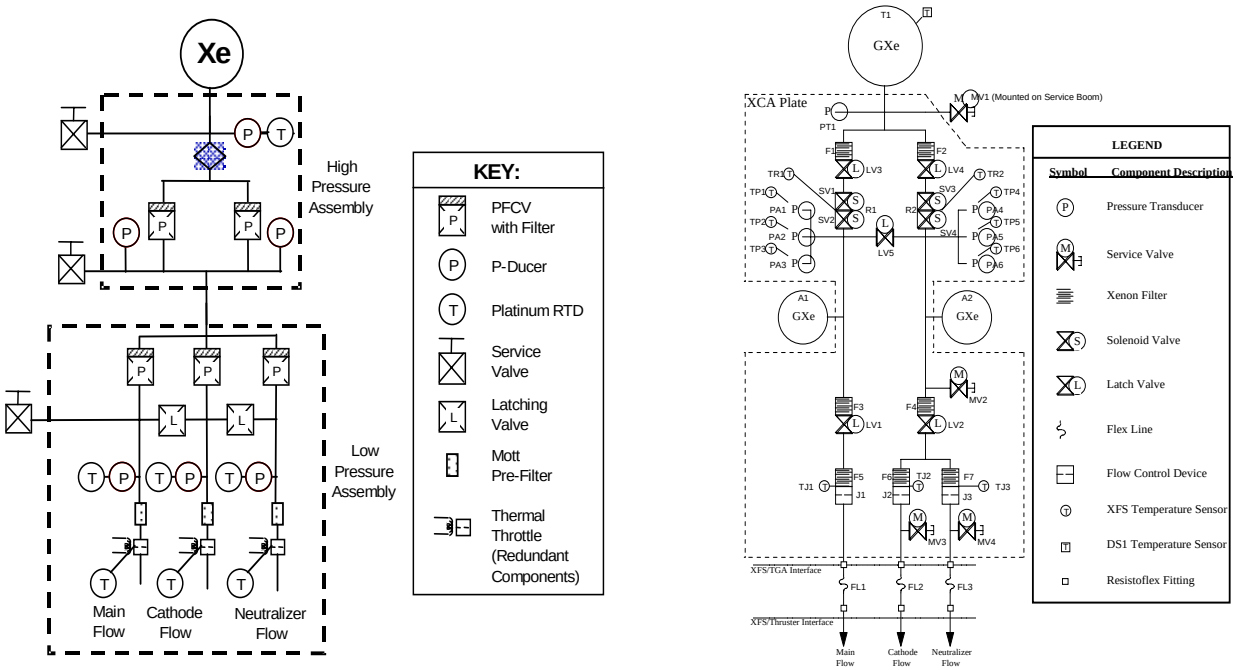

NEXT PMS NSTAR XFS

Figure 8. Comparison between NEXT and NSTAR Feed System Schematics.

Table 5. Propellant Management System characteristics.

Mass, kg	HPA	1.9
	LPA	3.1
Envelope, cm	HPA	33 x 15 x 6.4
	LPA	38 x 30.5 x 6.4
Internal volume, cc	11,775	
Power, W	HPA	4.3 (average)
		6 (max)
	LPA	16 (average)
		75 (max)
Flow Rate Range, sccm	Main	14 to 50
	Cathode	2 to 6
	Neutralizer	2.5 to 6
Throttle Rate, s	<60 (pressure control mode)	
Setpoint error, %	< +/- 3	
End of Life Residuals, %	<1 (10.34 MPa @ 25°C Beginning of Life conditions)	
Electrical Interfaces	HPA	19 pin TLM connector (14 lines)
		19 pin PWR connector (10 lines)
	LPA	55 pin TLM connector (42 lines)
		37 pin PWR connector (32 lines)
Thermal Interface	Baseplate	+20 to +50 °C (design limits)
Structural capability	Random vibration	14.1 grms qualification
	Pyroshock	2000 g peak

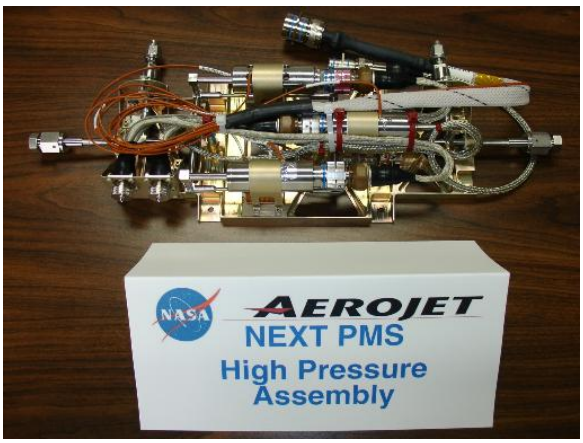

Figure 9. Phase II Engineering Model High Pressure Assembly.

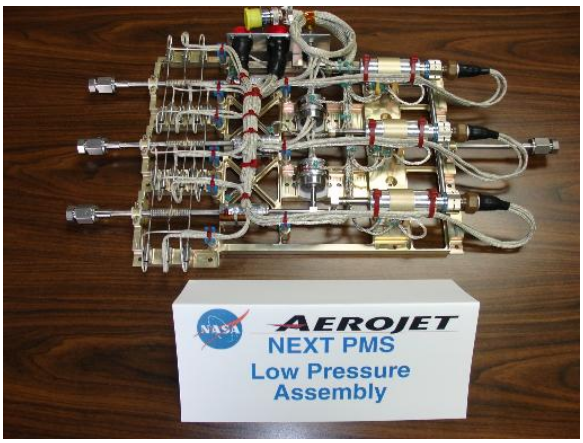

Figure 10. Phase II Engineering Model Low Pressure Assembly.

C. Flight Readiness Status

All EM tests were successful, demonstrating a high degree of readiness for transitioning the NEXT PMS from Engineering Model to Flight Model design with no design changes required by test findings. Transition from EM to flight configuration control requires final resolution of two open manufacturing issues and updates to work instructions. Validation for multiple thruster integrated operation and throughput capability are the most significant effort yet to go. Integration testing planned for 2007 and 2008 on the NEXT program will validate operation on multiple thrusters in parallel. Throughput is being partially addressed with the LDT hardware.

The present LPA configuration is likely to meet the redundancy requirements for any prospective mission. It provides single fault tolerance by incorporating a pair of inner manifold latch valves, dual redundant thermal throttle heaters and dual redundant thermal throttle temperature sensors. The pair of inner manifold latch valves allow the flow rate for each branch of the LPA to be operated in thermal control mode rather than pressure control mode in case one of the PFCVs or control pressure transducers fail. The redundant thermal throttle heaters and temperature sensors on each flow branch provide single fault tolerance to either a heater failure or temperature sensor failure. If this redundancy is in excess of what is required by a specific mission. the LPA component configuration could be considered for simplification by removal of some or all of the redundant components, proportionally reducing the LPA and wire harness mass and cost, as well as the DCIU complexity.

A significant problem for the ion propulsion system on Dawn that is not in the NEXT scope was development of the xenon tank. Therefore, a first order evaluation was conducted of the availability of flight design xenon propellant tanks requiring little or no non-recurring development costs. Two candidate tanks were identified, both of which are constructed of an inner titanium liner with a composite overwrap. The first candidate tank is manufactured by Alliant Techsystems Inc. (ATK), P/N 80458-1. This fully qualified, commercially available tank is rated for a maximum operating pressure of 18.6 MPa (2,700 psia) at a maximum operating temperature of 60 °C and has an internal volume of 129.9 L and a dry mass of 19.73 kg. The total xenon propellant capacity of this tank is 222 kg. A propellant tank within the same family as this tank is scheduled for flight in 2008. The second candidate is the Dawn tank itself, manufactured by Carleton Technologies Inc., which should now be available without further development. It is scheduled for launch on Dawn in 2007. This fully qualified tank is rated for a maximum operating pressure of 9.0 MPa (1,310 psia) at a maximum operating temperature of 30 °C and has an internal volume of 267.9 L and a dry mass of 18.14 kg. The total xenon propellant capacity of this tank is 425 kg.

The EM PMS has satisfied all technical requirements tested so far and is well on its way to TRL6 and full validation in relevant environments.

IV. Power Processing Unit

A. Design and Development

The Power Processing Unit (PPU) provides all thruster input power with a total of six power supplies and includes filtering and a digital slice to interface with the DCIU (Figure 11). The NEXT system requirements call for nearly three times the power capability and much wider ranges for beam voltage and current than the NSTAR system.

The PPU development was the responsibility of L3-ETI with participation and regular review by the PPU Integrated Product Team that included electric propulsion power processing experts from GRC, JPL, and Aerojet. An innovative design approach by L3-ETI uses a modular beam power supply with a dual bridge architecture that can be operated in a phase shifted or pulse width modulated mode. Each of six parallel 1kW beam modules can be switched off in blocks to preserve efficiency at low power. In addition, the modularity allows possible scaling of the PPU for higher or lower maximum power systems. The combination of phase shifting and pulse width modulated control allows each beam module to operate efficiently over the wide output voltage range. The five other supplies retain their NSTAR heritage topology, but switching frequency was increased to reduce mass of the discharge supply, which needs to provide double the current capability for NEXT power levels. L3-ETI and Aerojet coordinated closely in the development of the DCIU slice and the digital interface with the DCIU.

A breadboard unit was built and tested by L3-ETI in Phase I, culminating with successful integration testing at GRC with an EM thruster and breadboard PMS. Efficiencies over 94% were measured.[23] In Phase II, L3-ETI developed an EM PPU (Figure 12). Addressing a lesson learned from the NSTAR transition from Deep Space One to Dawn, the EM PPU drawings and assembly instructions were released and controlled as if for a flight system prior to manufacturing. The EM unit has completed functional testing on resistive loads at L3-ETI and was delivered to GRC in June, 2007, where it is being integration tested with a thruster. Additionally, it will undergo qualification level vibration and thermal vacuum testing, as well as EMI/EMC and system integration testing in 2007.

The NEXT PPU is capable of accommodating an extremely wide range of potential mission requirements. It can even operate an NSTAR thruster over its full throttle table, as well as operating a NEXT thruster over the high thrust-to-power points on the proposed extended throttle table (see reference 1). The PPU can accept unregulated input voltages from 80 to 160 V and throttle output beam voltages from 275 to 1800 V and output beam current from .5 to 3.52 A, while maintaining an efficiency of over 94% for most of the NEXT throttle table. The grid clear circuit can be commanded to provide pulses up to the full discharge current of 24 A, as opposed to 4A for the NSTAR PPU, greatly broadening its ability to clear a hard short. High speed fault responses to recycles and cathode extinction are now managed automatically within the PPU. The present design has switched outputs capable of operating either of two thrusters and, independently, either of two neutralizers. A summary of key PPU characteristics is given in Table 6.

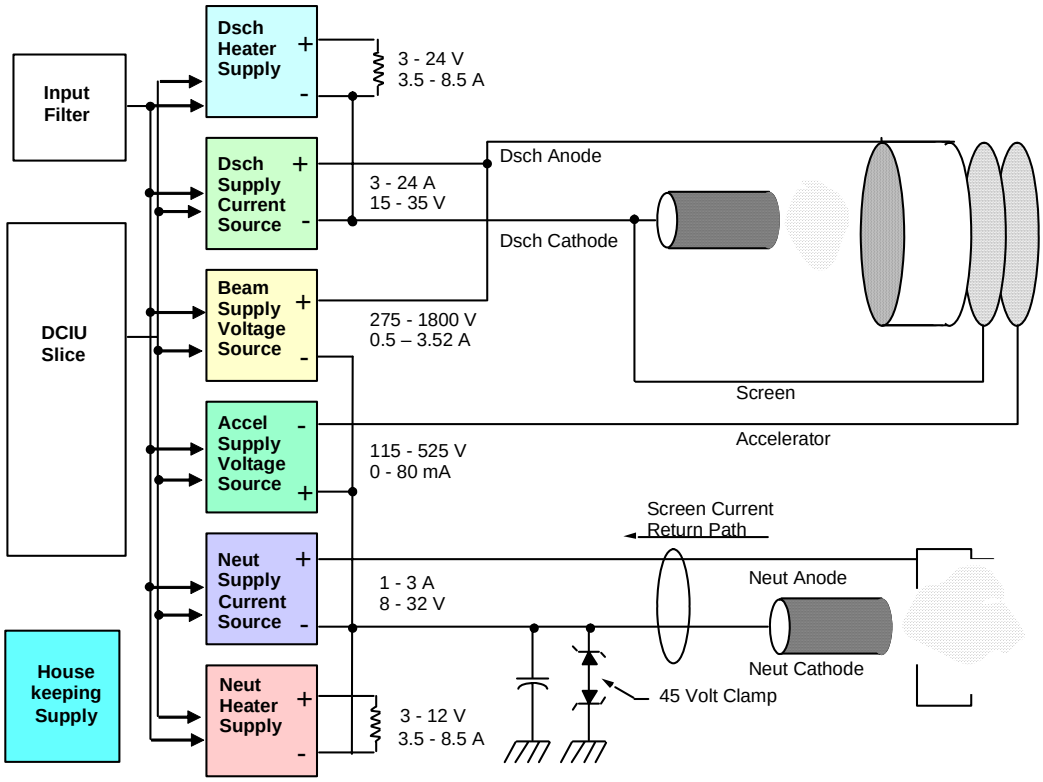

Figure 11. EM PPU Block Diagram.

B. PPU Design Readiness

The EM PPU is the same form, fit and function as a flight configuration and was built under flight-like configuration control in L3-ETI's commercial manufacturing area. Most EM parts have equivalent military or space screened components, and both L3-ETI and Aerojet have experience upscreening components. Government owned manufacturing and test tooling has been developed under the program and will be available for flight builds. The work done by L3-ETI to release and control drawings, incorporating changes as sub-assemblies are completed, ensures a smooth transition to flight production. Once validation testing is complete in 2007, the PPU design could be transitioned quickly to a qualification build with minimal non-recurring effort for an early first user.

Figure 12. Completed L3-ETI EM Power Processing Unit.

Table 6. Power processing unit key characteristics.

Mass, kg	34.5	
Envelope, cm	41.9 x 52.1 x 14.0 (excl. connectors, feet and screw heads)	
Input Power, W	610 - 7220 (unreg 80-160 VDC high power bus) 28 max. (22-34 VDC low power bus)	
Electrical Interface	Input 80-160 VDC	D38999/20GC11PN (11 lines)
	Input 28 VDC	D38999/20GA94PN (2 lines)
	DCIU Slice I/O RS-485	SDD15F402 (D-sub-min 15 contacts)
	Output Neutrlzr	D38999/20GD5SN (3 lines) 2X
	Output Thruster	Modified D38999/20GJ8BN (7 lines) 2X
Thermal Interface	Baseplate: -20 to +65°C operating -40 to + 70°C non-operating Less than 10% heat rejected radiatively from sides and top	
Structural capability	Static	22 g
	RandomVib	14.1 g_{rms} qualification
	Pyroshock	2000 g peak

V. Digital Control Interface Unit

The Digital Control Interface Unit (DCIU) functionality is comprised of the central IPS control logic and the command and telemetry interface between the spacecraft computer, the PPU and the PMS. In a flight system, the DCIU passes IPS telemetry to the spacecraft and executes stored sequences in response to high level commands from the spacecraft. These sequences include cathode conditioning, thruster ignition, throttling, steady-state operation and shut down, and fault detection response. Thruster operation sequences use a throttle table and flow rate calibration curves to determine set points for the PPU power supplies and the control loops. The beam current control loop is implemented digitally within the DCIU algorithms. The PMS pressure and temperature control loops are analog circuits that are part of the DCIU circuitry. These loops each consist of pressure or temperature signal conditioning, a controller, and a valve driver or heater supply for pressure and temperature control, respectively. The interfaces between the spacecraft, DCIU, and PPU are digital, while the interface between the DCIU and PMS is entirely analog. Additionally, the DCIU provides all PMS operating power.

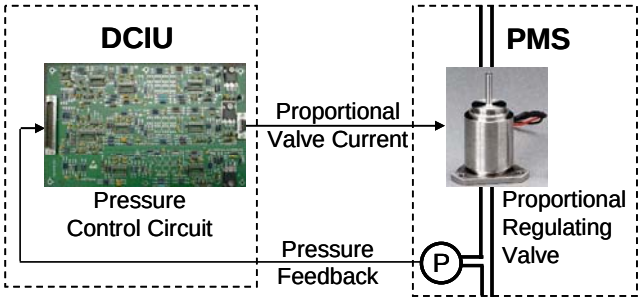

Figure 13. DCIU Pressure control circuit.

A primary goal of the NEXT DCIU effort is to design for multi-string operation from the start. The multi-string focus addresses one issue encountered adapting the NSTAR system from the single-string Deep Space-1 to the triple-string Dawn configuration. Since the exact configuration of the DCIU would be highly dependent on a specific spacecraft mission, as well as the final EM PMS design, the DCIU development scope within the NEXT program was limited to a simulator status.

The three-string DCIU simulator developed by Aerojet includes a computer, software, PPU digital interface, pressure and temperature control for 3 PMS LPAs and an HPA.[18] Except for the pressure controller circuits, all present hardware is commercially available test equipment. The pressure control circuits were developed to a breadboard level, based partially on Aerojet's experience driving the same valve to control the flight qualified Hall Thruster Propulsion System (HTPS) (Figure 13).[17] Software development includes the RS-485 PPU interface, beam current control, throttle table and flow calibration implementation, communication with simulator test equipment, and user interface.

The DCIU simulator has been used for PMS functional and thermal vacuum testing at Aerojet, demonstrating stable and accurate control of pressures and flow rates. The simulator has also supported PPU functional acceptance testing at L3 Comm ETI, validating the PPU interface. To validate beam current control and overall system operation, it will support single string integration testing later in 2007 and multi-string integration testing in 2008.[7]

To support a flight system, the control algorithms must be adapted to operating sequences specific to a particular mission and most of the hardware needs to be developed. Although DS-1 and Dawn have used a stand alone DCIU, integrating DCIU functionality into the PPU is under consideration for a future PPU design update.[3] This architecture mimics that of the HTPS flight system and should reduce system cost.

Projected characteristics for a flight DCIU are given in table 7.

Table 7. Projected DCIU characteristics.

Mass, kg	Stand alone	2.5 sngl string + 1.25/addl string
	In PPU	1.8 sngl string + 1/addl string
Envelope, cm	Stand alone	18 x 24 x 8 box
	In PPU	16 x 40 card area
Power, W	Total input	30 (average)
		100 (peak)
	Deposition in DCIU	10 (average)
		20 (peak)
Electrical Interfaces	Spacecraft – DCIU	D-sub-min (15 contacts)
	DCIU – PPU	RS-485
	DCIU – HPA	2 connectors (14 TLM +10 PWR lines)
	DCIU – LPA (each)	2 connectors (42 TLM +32 PWR lines)
Structural capability	Random vibration	14.1 grms qualification
	Pyroshock	2000 g peak

VI. Gimbal

The NEXT gimbal design was driven by the need to provide a small footprint and relatively high gimbal angles for potential NEXT missions with multiple thrusters on a single deck. The design was developed by Swales Aerospace under contract to JPL[24] from an innovative concept by T. Haag at GRC.[25] In addition to the small footprint and high gimbal authority, the design is lightweight, self-latched for launch, and inherently redundant to the loss of one motor.

Since the gimbal requirements are mission dependent and existing designs may be sufficient for some missions, the NEXT gimbal development was limited to a flight-packaged functional test unit with a focus on validating structural and gimbal angle capabilities. Preliminary radiative thermal analysis has been conducted, but do not yet incorporate the results of the thruster thermal development test. Propellant and electrical flexure designs were not finalized at this stage of development. As described above, the thruster and neutralizer harnesses are composed of continuous cables to a remote flying lead to avoid connector temperature limitations. Therefore, the thruster-gimbal electrical flexure is envisioned to be an integrated part of the thruster assembly with the thruster connectors mounted to the gimbal base. However, preliminary work on harness routing and flexure requirements is ongoing between JPL and Aerojet.

The gimbal design has three independent actuator legs, providing at least 17° gimbal range over two axes. Flexible links with lined sleeve bearings are used instead of spherical bearings. The stowed height from the spacecraft-gimbal interface plane to the end of the neutralizer is 46.7 cm, only 2.7 cm taller than the thruster itself. Table 8 gives a summary of NEXT gimbal characteristics.

Table 8. NEXT gimbal characteristics.

Mass, kg	6 excluding propellant line flexures	
Envelope, cm	Base	62.2 (hex flats) with 5.6 overhang; 71.8 (hex points)
	Height	46.7 (launch position)
Total Power, W	Motors	6.5 (max) 3X (excl heaters)
	Pin-pullers	15 (pulse) 3X (excl heaters)
Range, degrees	Neutralizer axis	+/- 17
	Perpendicular axis	+/- 19
Step size, degrees	0.003	
Slew rate, degrees/s	0.65	
Backlash, degrees	0.045	
Mechanical interface, cm	Flat, hexagonal baseplate	
Electrical Interface	Motors	lines - connector TBD
	Pin-pullers	8 lines (3X) - connector TBD
Thermal Interface	TBD	
Structural capability	Static	33.5 g design
	Random Vib.	10.0 g_{rms} qualification
	Pyroshock	1500 g peak

The gimbal has undergone functional and vibration testing at qualification levels integrated with the thruster (Figure 5).[13] Aside from the findings noted in the thruster section, there were no findings for the gimbal. The gimbal will be re-tested later in 2007 when the PM1R thruster undergoes vibration testing. Overall, the gimbal is considered to be at a "breadboard" level with major portions of the design at EM. Tasks to be completed for a full gimbal flight design include updated thermal modeling and thermal vacuum testing, torque margin analysis and testing, and harness and propellant flexure design. However, transition to a flight-ready design for the actuator assemblies is anticipated to require minimal non-recurring engineering.

VII. Flight System Production Capability

Equally as important as having the design complete and validated is ensuring that there is adequate capability for industrial production of flight hardware. The NEXT program was structured from the beginning to address this need by giving primary design and manufacturing responsibility for the system elements to the industrial partners in Phase II, and by making all design information available to both industrial partners, regardless of who had primary responsibility for an element.

Since all technical development and design heritage up to the EM thruster had been done at NASA GRC, a rigorous technology transfer process was implemented for the critical thruster element. NASA provided complete drawing packages for the Space Station Plasma Contactor, the NSTAR thruster and the NEXT EM thruster, and a clear matrix of design features to be maintained and to be changed in the PM design was agreed upon. A thorough review of lessons learned from NSTAR was conducted by examining NSTAR flight unit assembly inspection logs, flight unit Test Event Reports, team member lessons learned memos, the Dawn/NSTAR Inheritance Review, and results from the 30,000 NSTAR Extended Life Test.[26] Early in Phase II, Aerojet personnel traveled to NASA GRC for a total of 16 man-weeks to participate first hand in fabrication of EM thrusters. During this time, critical processes such as optics hydroforming and flake retention mesh installation were conducted by Aerojet personnel side-by-side with NASA personnel, while lessons learned from early EM thruster fabrication and test were reviewed. The PM design was further aided by regular input and review by the thruster Integrated Product Team. Finally, GRC personnel traveled to Aerojet for regular technical interchange meetings and were available for consultation onsite at Aerojet for most of the critical final assembly phases of the PM1 thruster. The duplication of the EM performance with the first test series of the first PM thruster while implementing significant improvements is evidence of the success of this process.

Materials, components and processes critical to producing the NEXT ion propulsion system are listed in Table 9. Suppliers for the electrode, refractory and flake retention materials had been identified and specified by GRC. With the exception of the flake retention mesh, where Aerojet worked with the supplier identified by NASA GRC, Aerojet also has an on-going procurement relationship with these suppliers for other flight programs. The cathode keeper graphite material and out-plant braze process was identified and developed by Aerojet as part of its Phase II efforts. Aerojet works with several suppliers for high purity xenon and purity testing for other flight electric propulsion programs.

Table 9. NEXT Propulsion System Critical Materials, Components & Processes.

Materials:	**Processes:**
• Grid electrode • Flake retention mesh • Cathode refractory metals • Cathode keeper graphite • Xenon **Components:** • Cathode emitters • Cathode heaters • Thruster insulators • Propellant isolators • Thruster magnets • Thruster harness • PMS thermal throttle • PMS valves • PMS pressure transducers • PPU magnetics • PPU EEE parts	*Out-Plant:* • Cathode tube braze • Graphite keeper braze • Tube/keeper electron beam welds • Heater confidence testing • Optics/plasma screen etch • Optics alignment • Spin forming • Titanium coating *NASA:* • Optics hydroforming • Thruster testing Performance, vibration, thermal vac, life *Aerojet:* • Emitter handling and storage • Heater electron beam weld • Flake retention surface treatment • Orbital welding • Clean room assembly • Space electronics assembly • Thruster performance testing • PMS testing Functional, proof, vibe, thermal vacuum • PPU Testing Functional, vibration, thermal vacuum

Source Control Drawings and suppliers have been developed for all critical thruster and PMS components. The suppliers have detailed work instructions in place. The specifications for the cathode emitters and neutralizer heaters are identical to those developed by GRC for the Space Station Plasma Contactor. Except for the thruster harness, all critical thruster components have heritage from the NEXT EM and NSTAR programs. As part of the phase II effort, the heater design was extended to the larger cathode heater and new swaged cable and heater confidence test suppliers was developed. Life testing of the heaters to validate the new supplier is planned for 2007 at GRC. Aerojet manufactured the PM high voltage propellant isolators, two of which have so far undergone over 9500 hours of component life testing at GRC at 265 °C and worst case voltage and internal pressure.[14] The PMS component suppliers supply components for other Aerojet flight hardware. In the case of the valves, the same part number is used on another flight electric propulsion system.

As part of the Phase II effort several out plant processes have been developed. Aerojet has long-standing relationships with the brazing and electron beam welding suppliers who regularly perform work on other Aerojet flight systems. All braze and weld schedules have been developed for both in house and out plant operations. Aerojet also performs heater confidence testing in house. Key new or significantly improved out plant processes specific to NEXT that were developed by Aerojet under the Phase II thruster effort include the graphite keeper braze, optics etching, optics alignment and titanium coating. While much of the flight production is intended to be transitioned to industry, optics hydroforming and thruster testing are expected to remain within NASA to take advantage of the significant existing capability.

Figure 14. Space electronics thermal vacuum test facility at Aerojet.

Processes specific to NEXT that were transferred to Aerojet as part of the program include emitter handling, heater electron beam welding, and flake retention surface treatments. These have each been validated as equivalent to the heritage processes at GRC. As

part of Phase II, Aerojet developed an ion thruster shipping container that maintains cathode emitter at NASA-specified storage conditions. Improved thruster producibility was demonstrated by the reduction of time to perform critical top assembly operations from six weeks for PM1 to two for PM1R. Other PMS and thruster processes are already standard processes for assembling flight propulsion systems at Aerojet. Aerojet has delivered over 200 spacecraft propulsion systems for spacecraft including GPS Block IIF, Themis, New Horizons, Stereo and all Discovery missions. Aerojet can perform all PMS acceptance and qualification tests on site.

While Aerojet did not have responsibility for design or manufacturing of the EM PPU, the program is structured so that both industrial partners have access to all design and test data. L3-ETI has demonstrated a capability for manufacturing flight NEXT PPUs through their delivery of NSTAR PPUs and the NEXT EM PPU. However, Aerojet also has all the space electronics assembly and test facilities in place to produce a NEXT flight PPU. Aerojet has uniquely wide experience with electric propulsion system power processing, having produced over 100 flight power processors of eight different flight qualified designs for a wide range of electric propulsion applications. These power processors range from 2 kW arcjets[27] up to the 27 kW ESEX arcjet[28] and from a 70 W Pulsed Plasma Thruster[29] to the 4.5 kW Hall Thruster Propulsion System (HTPS).[17] The HTPS PPU has many similar functions to the NEXT PPU and DCIU, including heater and keeper supplies and a master control board with much of the same functionality as the NEXT DCIU. Aerojet is in the process of delivering 12 HTPS flight systems, including thruster, PPU and xenon flow control. The component engineering staff is experienced in screening of electronic parts, as well as procurement of space qualified magnetics from a long-standing supplier of flight hardware. Electronic assembly is done in compliance with J-STD-001, Class 3, including certified solder, inspection and conformal coating. Facilities in place at Aerojet can support PPU electrical, vibration and thermal vacuum testing (Figure 14).

VIII. Conclusion

The NEXT ion propulsion system has demonstrated a high level of technology and manufacturing readiness. The prototype and engineering model hardware has begun validation through qualification-level testing. The state of the art NASA thruster technology developed through Phase I has been very successfully transferred to industry. The PM thruster has completed one round of validation testing, demonstrating performance and overall structural and thermal robustness and retiring significant design risks. The EM PMS has successfully completed its validation test program. By the end of 2007, the thruster and PPU stand alone tests, as well as system integration tests will be complete, validating the NEXT system for TRL6.

The NEXT industrial partners have demonstrated manufacturing readiness through the production high fidelity hardware. Team focus on the reduction of first user costs have resulted in significant manufacturing process development and improved documentation of hardware. The facilities required to build the NEXT system have also been developed and are available. Aerojet can demonstrate the capability to produce all elements of the NEXT ion propulsion system. Taken with the high technical readiness level, this manufacturing readiness will make the NEXT system an attractive option for mission opportunities in 2008.

Acknowledgments

The work at Aerojet on this contract was supported under NASA contract NAS3-02152. The authors would like to acknowledge the assistance and efforts of our teammates on the Integrated Product Teams that included NASA Glenn Research Center, Jet Propulsion Lab and L-3ETI.

References

[1]Polk, J. et al., "Validation of the NSTAR Ion Propulsion System on the Deep Space One Mission: Overview and Initial Results," AIAA-1999-2274, *35th AIAA/ASME/SAE/ASEE Joint Propulsion Conference and Exhibit*, 1999.

[2]Brophy, J., et al., "Development and Testing of the Dawn Ion Propulsion System," AIAA-2006-4319, *42rd AIAA/ASME/SAE/ASEE Joint Propulsion Conference and Exhibit*, 2006.

[3]Patterson, M. and Benson, S., "NEXT Ion Propulsion System Development Status and Performance," AIAA-2007-5199, *43rd AIAA/ASME/SAE/ASEE Joint Propulsion Conference and Exhibit*, 2007.

[4]Leeds, M., Eberhardt, R. and Berry, R., "Development of the Cassini Spacecraft Propulsion System," AIAA-1996-2864, *32th AIAA/ASME/SAE/ASEE Joint Propulsion Conference and Exhibit*, 1996.

[5]Oh, D., Benson, S., Witzberger, K., and Cupples, M., "Deep Space Mission Applications for NEXT: NASA's Evolutionary Xenon Thruster," *AIAA-2004-3806, 40th AIAA/ASME/SAE/ASEE Joint Propulsion Conference and Exhibit*, 2004.

[6]Soulas, G., Domonkos, M. and Patterson, M., "Performance Evaluation of the NEXT Ion Engine," AIAA-2003-5278, *39th AIAA/ASME/SAE/ASEE Joint Propulsion Conference & Exhibit*, July 2003.

[7]Hoskins, W. A., et al., "Development of a Prototype Model Ion Thruster for the NEXT System," AIAA-2004-4111, *40th AIAA/ASME/SAE/ASEE Joint Propulsion Conference and Exhibit*, 2004.

[8]Anderson, J., Sengupta, A. and Brophy, J., "Post-Test Analysis of the Deep Space One Spare Flight Thruster Ion Optics," - 2004-3610, *40th AIAA/ASME/SAE/ASEE Joint Propulsion Conference and Exhibit*, 2004.

[9]Benson, S. and Patterson, M., "Progress in Technology Validation of the NEXT Ion Propulsion System," 54*th JANNAF Propulsion Meeting*, May, 2007.

[10]Herman, D., Soulas, G. and Patterson, M., "Status of the NEXT Ion Thruster Long-Duration Test," AIAA-2007-5272, *43rd AIAA/ASME/SAE/ASEE Joint Propulsion Conference and Exhibit*, 2007.

[11]VanNoord, J., "NEXT Ion Thruster Thermal Model," AIAA-2007-5218, *43rd AIAA/ASME/SAE/ASEE Joint Propulsion Conference and Exhibit*, 2007.

[12]Anderson J., Snyder, J. S., VanNoord, J. and Soulas, G., "Thermal Development Test of the NEXT PM1 Ion Engine," AIAA-2007-5217, *43rd AIAA/ASME/SAE/ASEE Joint Propulsion Conference and Exhibit*, 2007.

[13]Snyder, J. S., Anderson J., Soulas, G and VanNoord, J., "Environmental Testing of the NEXT PM1 Ion Engine," AIAA-2007-5275, *43rd AIAA/ASME/SAE/ASEE Joint Propulsion Conference and Exhibit*, 2007.

[14]Pinero, L. and Sovey, J., "NEXT Thruster Component Verification Testing," AIAA-2007-5276, *43rd AIAA/ASME/SAE/ASEE Joint Propulsion Conference and Exhibit*, 2007.

[15]VanNoord, J. and Williams, G., "Lifetime assessment of the NEXT Ion Thruster," AIAA-2007-5274, *43rd AIAA/ASME/SAE/ASEE Joint Propulsion Conference and Exhibit*, 2007.

[16]Ganapathi, G.B., et.al., "Post-launch performance characterization of the Xenon Feed System on Deep Space One", AIAA-99-2273, Presented at the 35th AIAA/ASME/SAE/ASEE Joint Propulsion Conference and Exhibit, June 1999.

[17]de Grys, K., et.al., "4.5 kW Hall Thruster System Qualification Status", AIAA-2005-3682, Presented at the 41st AIAA/ASME/SAE/ASEE Joint Propulsion Conference and Exhibit, July 2005.

[18]Monheiser, J.M., et.al., "Development of the Digital Control Interface Unit (DCIU) for the NEXT System", AIAA-2004-4112, Presented at the 40th AIAA/ASME/SAE/ASEE Joint Propulsion Conference and Exhibit, July 2004.

[19]Aadland, R.S., et.al., "Xenon Propellant Management System for 40 cm NEXT Ion Thruster", AIAA-2003-4880, Presented at the 39th AIAA/ASME/SAE/ASEE Joint Propulsion Conference & Exhibit, July 2003

[20]Patterson, M.J., et.al., "NEXT Ion Propulsion System: Single-String Integration Test Results", JANNAF Proceedings, May 2004

[21]Aadland, R.S., et.al., "Development Status of the NEXT Propellant Management System", AIAA-2004-3974, Presented at the 40th AIAA/ASME/SAE/ASEE Joint Propulsion Conference & Exhibit, July 2004

[22]Aadland, R.S., et.al., "Development Results of the NEXT Propellant Management System", JANNAF Proceedings, December 2005

[23]Todd, P., Martinelli, R., Wiseman, S. and Pinero, L., "Status of the NEXT 7 kW Power Processing Unit," AIAA-2005-3868, 41rd AIAA/ASME/SAE/ASEE Joint Propulsion Conference and Exhibit, 2005.

[24]Vaughan, D., "Gimbal Development for the NEXT Ion Propulsion System", AIAA-2005-3865, Presented at the 41st AIAA/ASME/SAE/ASEE Joint Propulsion Conference and Exhibit, July 2005

[25]Haag, T., "Ion Thruster Support and Positioning System," US patent # 5,738,308, April 14, 1999.

[26]Sengupta, A. et al., "An Overview of the Results from the 30,000 Hr Life Test of Deep Space 1 Flight Spare Ion Engine," AIAA-2004-3608, *40th AIAA/ASME/SAE/ASEE Joint Propulsion Conference and Exhibit*, 2004.

[27]Fisher, J. and Meyer, S., "The Design and Development of the MR-510 Power Conditioning Unit," AIAA-1998-3630, *34th AIAA/ASME/SAE/ASEE Joint Propulsion Conference and Exhibit*, 1998.

[27]Cassady, R. J., Hoskins, W. A. and Vaughan, C., "Development and Qualification of a 26-Kilowatt Arcjet Propulsion Subsystem," *Journal of Power and Propulsion*, Vol. 18, No. 4, July-August, 2002, pp740-8.

[28]Benson, S., et al., "Development of a PPT for the EO-1 Spacecraft," AIAA-1999-2276, *35th AIAA/ASME/SAE/ASEE Joint Propulsion Conference and Exhibit*, 1999.