Propulsion Control and Diagnostics Research for Hybrid Electric Propulsion

Discussion

George Kopasakis and Amy Jankovsky

Hybrid Electric Propulsion (HEP) - Roadmap Activity

- NASA GRC formed a team over the past year to come up with technical roadmaps for the HEP project - to identify the technical areas that need development and the performance goals over the next 20 years in order to help formulate the project.

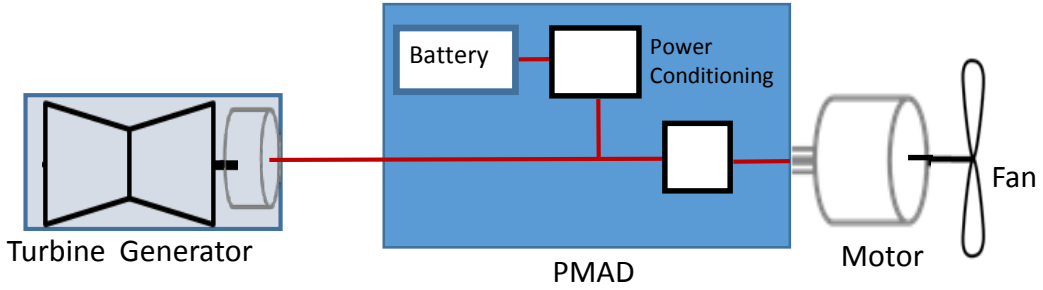

Simplified HEP System Diagram

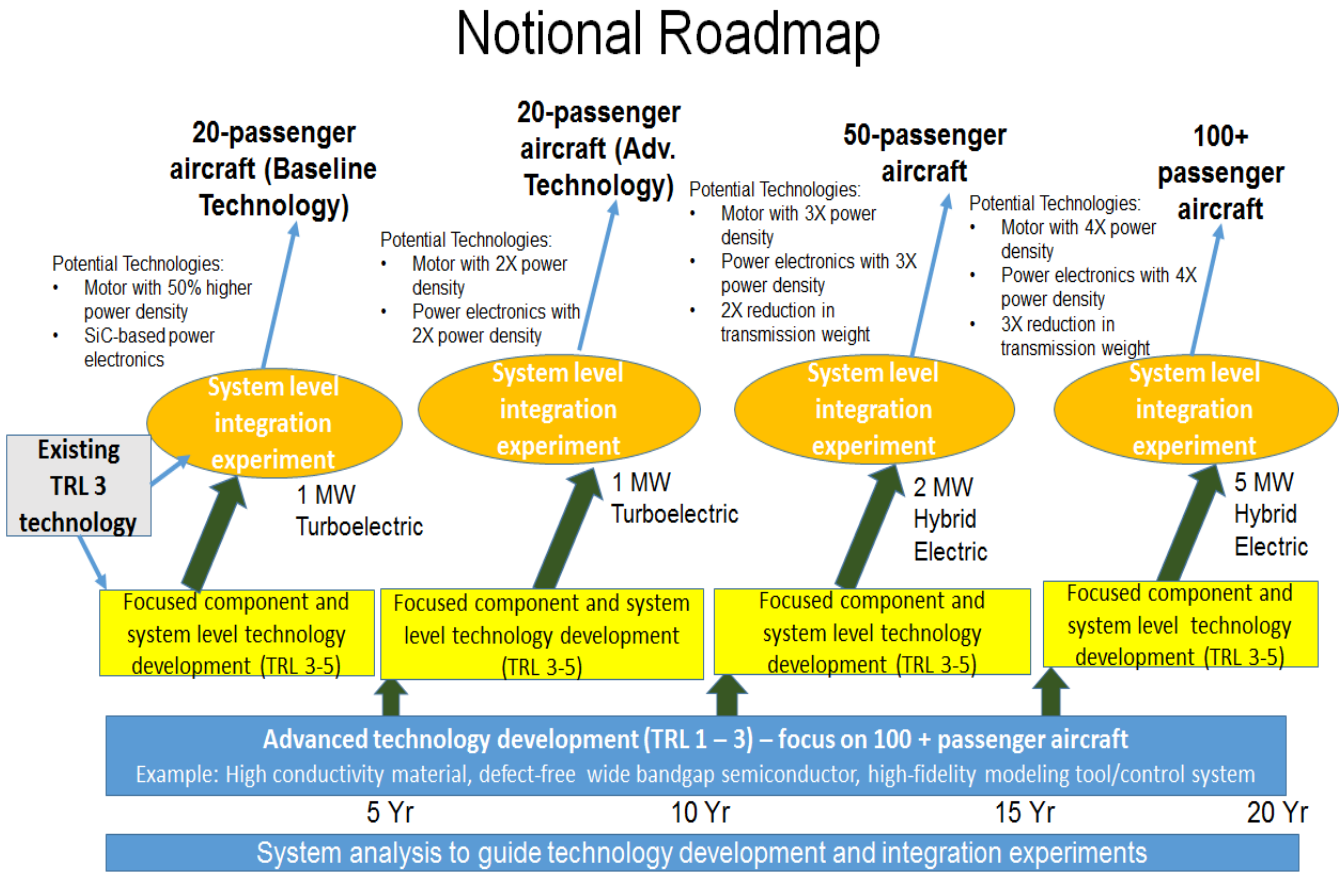

Technology Advancement Roadmap

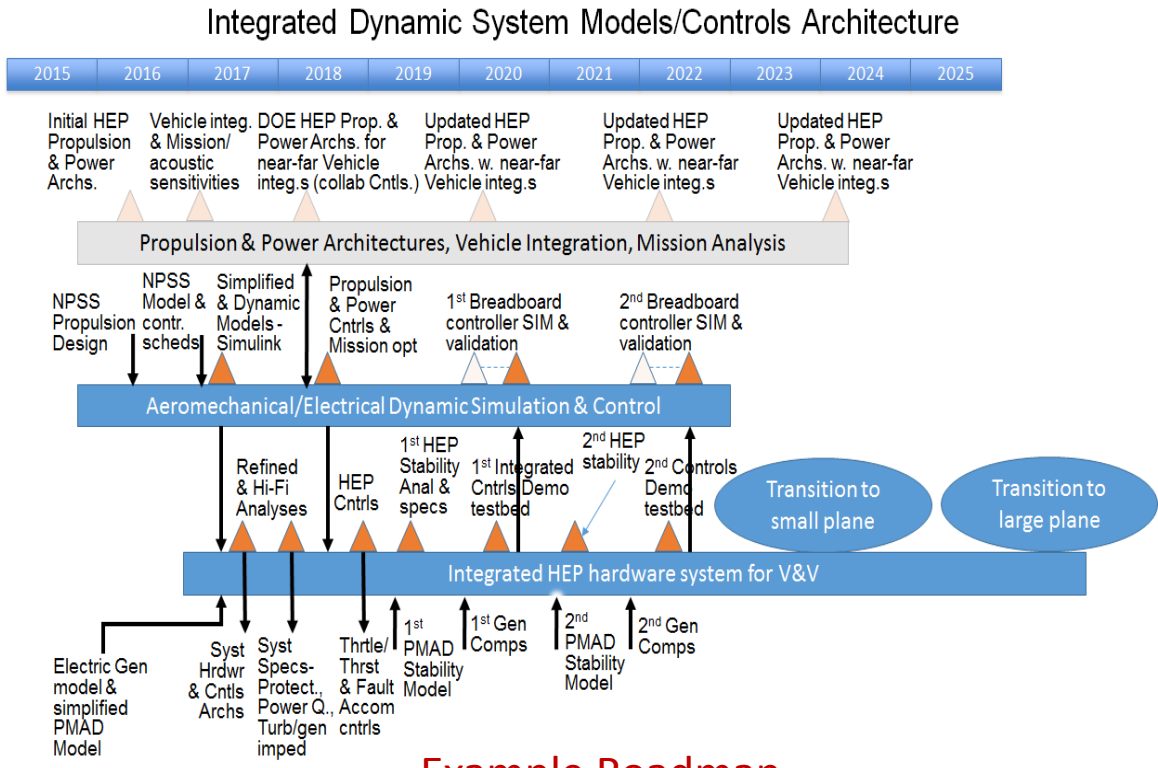

Example Roadmap

Tool for Dynamic Modeling and Analysis of HEP Hardware & Control Architectures

Background:

- A simulation tool is proposed to help perform Hybrid Electric Propulsion (HEP) hardware and control architecture feasibility studies. The nature of HEP like microgrids is such that these designs for power management and distribution cannot be divorced from the fact that electrical power generation is derived from Turbomachinery, and the overall system has to meet the dynamic performance and stability requirements of current turbomachinery based propulsion systems.

Objectives:

- Collaboratively develop the basic subsystem models and interfaces required for an HEP system simulation with sufficient fidelity to perform subsystem hardware requirements and control architecture studies to meet overall system (throttle command to thrust response) dynamic performance requirements
- Hardware architecture modeling will be developed with the necessary turbomachinery and PMAD hardware and controls such as voltage regulation to allow feasibility studies for alternative HEP hardware architectures.
- Develop HEP controls logic for response to pilot throttle commands and perform the control functions necessary to allow feasibility studies of HEP control architectures.

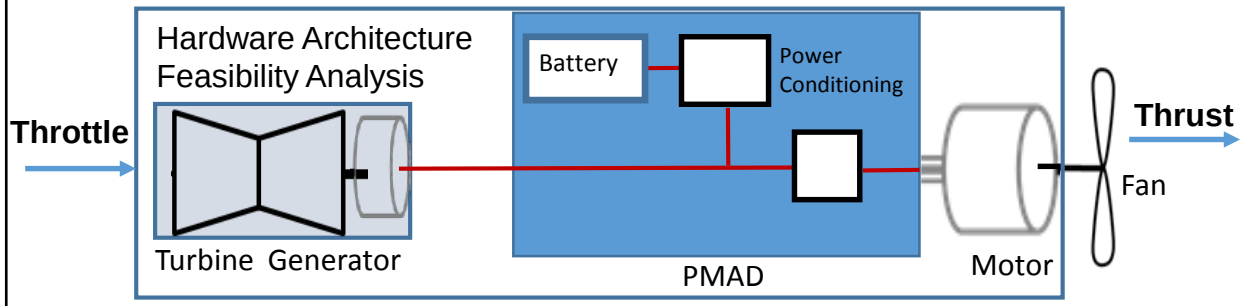

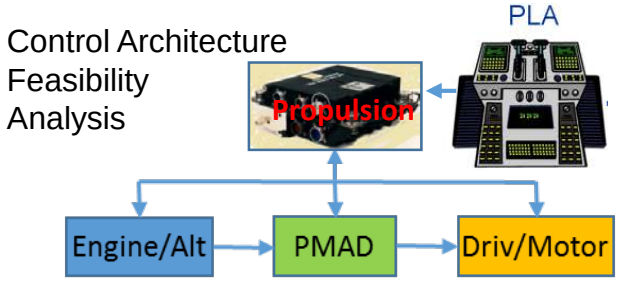

Overall System – throttle to thrust response

- Control of Turbomachinery + PMAD + Propulsor Control to meet FAA dynamic performance requirements
- Modeling of subsystem interactions

HEP Hardware & Control Architecture Simulation Tool

Technical Challenges:

- Develop turbine engine cycle design for HEP and develop an engine model with sufficient fidelity to perform hardware and control architecture studies.
- Develop appropriate PMAD models consisting of battery, battery conditioning, drive\motor and fan load, with appropriate primary voltage, battery charge/discharge, and drive/motor controls.
- Develop propulsion controls for pilot throttle to thrust command with appropriate subsystem command generation and control algorithms.

Outcomes:

- Perform alternative HEP hardware and control architecture studies that also take into account overall HEP performance.

This is a proposed effort developed by the Controls group in collaboration with the Systems Analysis group at GRC.
This work is currently not funded.

What are the key Dynamic Modeling and Control Challenges for Turbomachinery Based Hybrid Electric Propulsion System for Commercial Civil Aircraft?

Participant Response:

- Has NASA looked into similar challenges for hybrid/electric vehicle systems for a car? There might be some good lessons to learn from that.
- AFRL is funding some hybrid electric modules. Reach out to DoD folks and ARPA-E.
- It is important to build a preliminary integrated dynamic system model in the Matlab/Simulink environment to determine control needs and various system trade-offs to meet performance/stability requirements
    - Develop parametric transient models of components and start understanding interface issues
- What can the controls community contribute to help inform early decisions?
- Issue of energy regeneration? Hybrid cars use breaking energy to charge battery. Is there potential to exploit this concept in air-vehicles – trade potential energy for charging batteries when descending?
- Issue of balancing power management across multiple propulsors.