Enhanced Response Engine Control for Emergencies

Jonathan Litt

NASA Glenn Research Center

5th Propulsion Control and Diagnostics Workshop
Ohio Aerospace Institute (OAI)
Cleveland, OH
September 16-17, 2015

Acknowledgments

James Liu, *formerly of N&R Engineering*

T. Shane Sowers, *Vantage Partners, LLC*

A. Karl Owen, *NASA Glenn Research Center*

Ten-Huei Guo, *NASA Glenn Research Center*

Contents

- Background
- Objectives
- Simulations & Results
- Summary

Background

- NASA Aviation Safety Program
- Emergency situations (e.g., runway incursion, airframe damage) may warrant unconventional usage of aircraft engines
- Overthrust (OT): Increase maximum thrust output
- Faster response (FR): More responsive transient thrust response
- Development of risk-based control modes that enhance engine performance for emergency use

- Csank et al., "The Effect of Modified Control Limits on the Performance of a Generic Commercial Aircraft Engine," 47th AIAA/ASME/SAE/ASEE Joint Propulsion Conference and Exhibit, 2011.
- May et al., "Improving Engine Responsiveness during Approach through High Speed Idle Control," 47th AIAA/ASME/SAE/ASEE Joint Propulsion Conference and Exhibit, 2011.
- Liu et al., "Design and Demonstration of Emergency Control Modes for Enhanced Engine Performance," 49th AIAA/ASME/SAE/ASEE Joint Propulsion Conference, 2013

Enhanced Response Engine Control Philosophy

- For engine certification, the FAA requires the manufacturer to show through analysis that various classes of failures are predicted to occur at a rate not in excess of a specified level.
- This can be achieved by developing distributions on part life given some assumed operating parameters.
- This is equivalent to determining a risk of operation.
- The same technique can be used to set the risk of operation to an arbitrary level.
- For emergency operation, one might be willing to accept a higher risk for a short time in order to have a better chance of saving the aircraft.

Control Mode: Overthrust

- Control mode relaxes limits on temperature and rotational speeds
- Thrust available is increased
- Maximum overthrust at any operating condition is defined by a predetermined disk/blade failure risk level

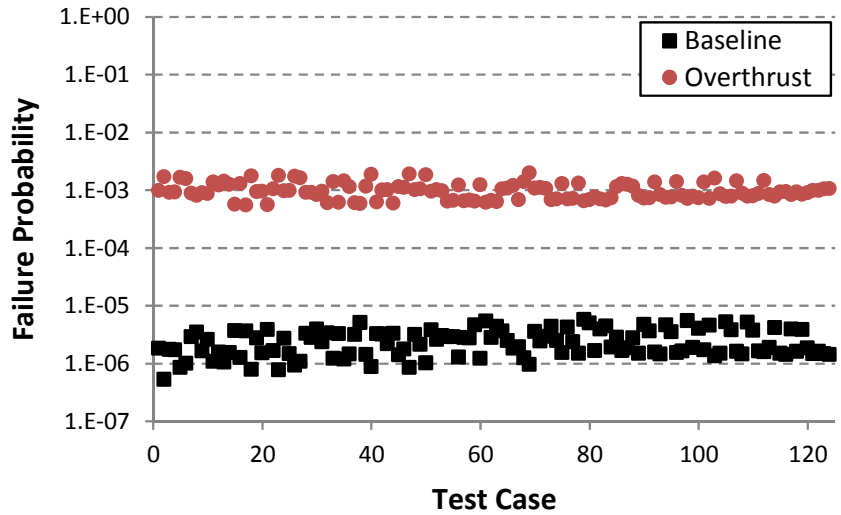

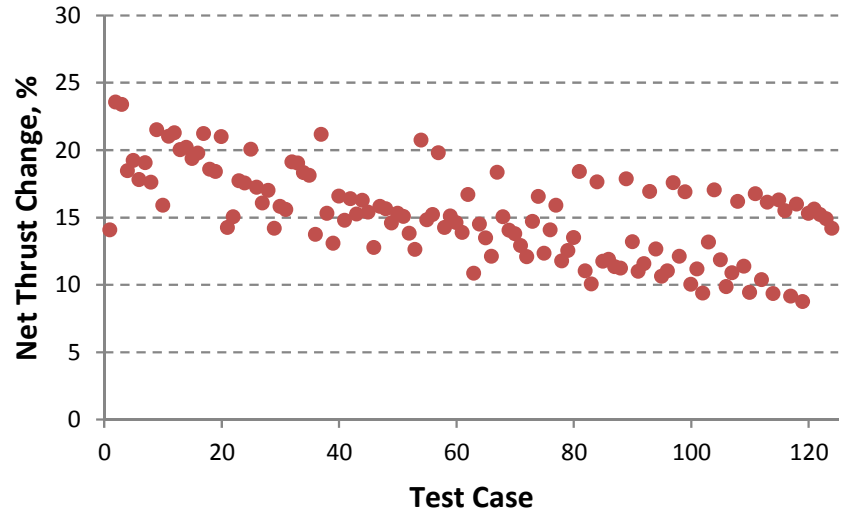

Liu et al., "Design and Demonstration of Emergency Control Modes for Enhanced Engine Performance," 49th AIAA/ASME/SAE/ASEE Joint Propulsion Conference, 2013.

Overthrust: Implementation

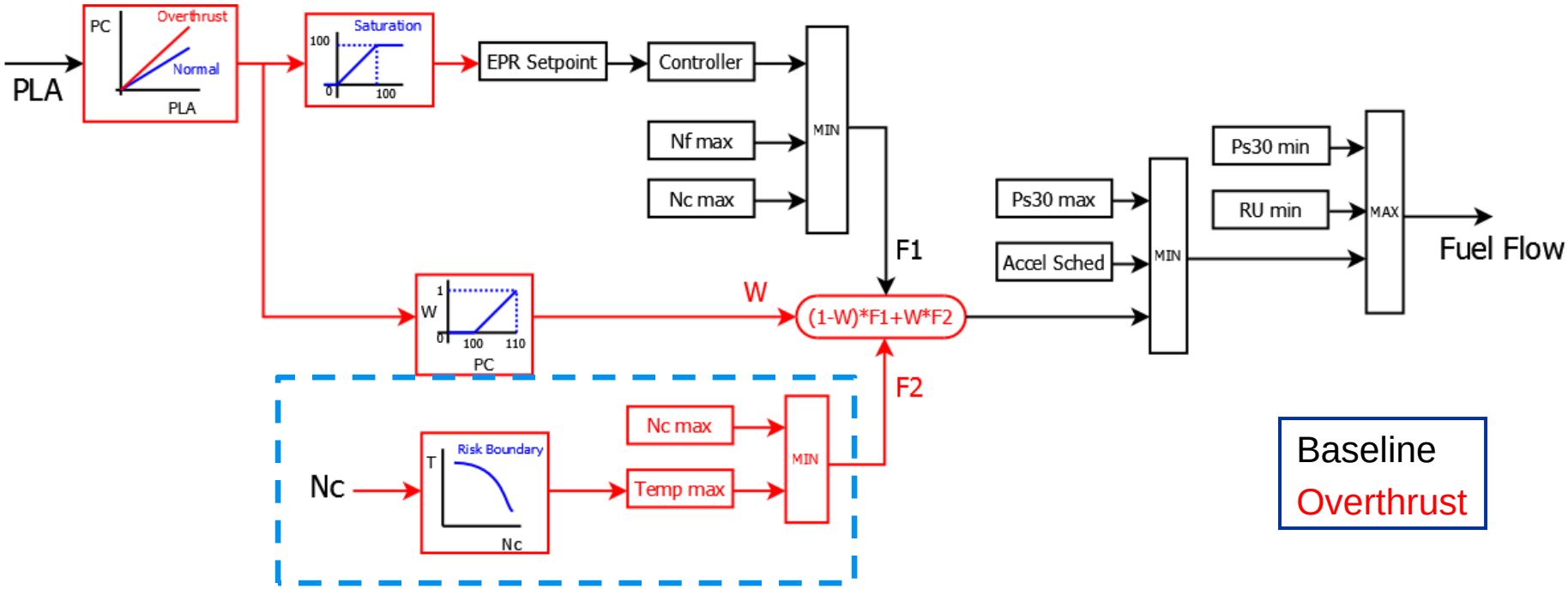

- Core speed and turbine temperature regulators used to maintain engine operating point on risk boundary
- Overthrust activation: PLA mapping switches from idle-to-max to idle-to-overthrust

Control Mode: Faster Response

- Control mode activation increases thrust responsiveness to throttle changes
- Modification to engine control system gains, schedules, etc.
- Risk of stall related to minimum stall margin attained during transient
- Reduction of minimum stall margin to consistent level

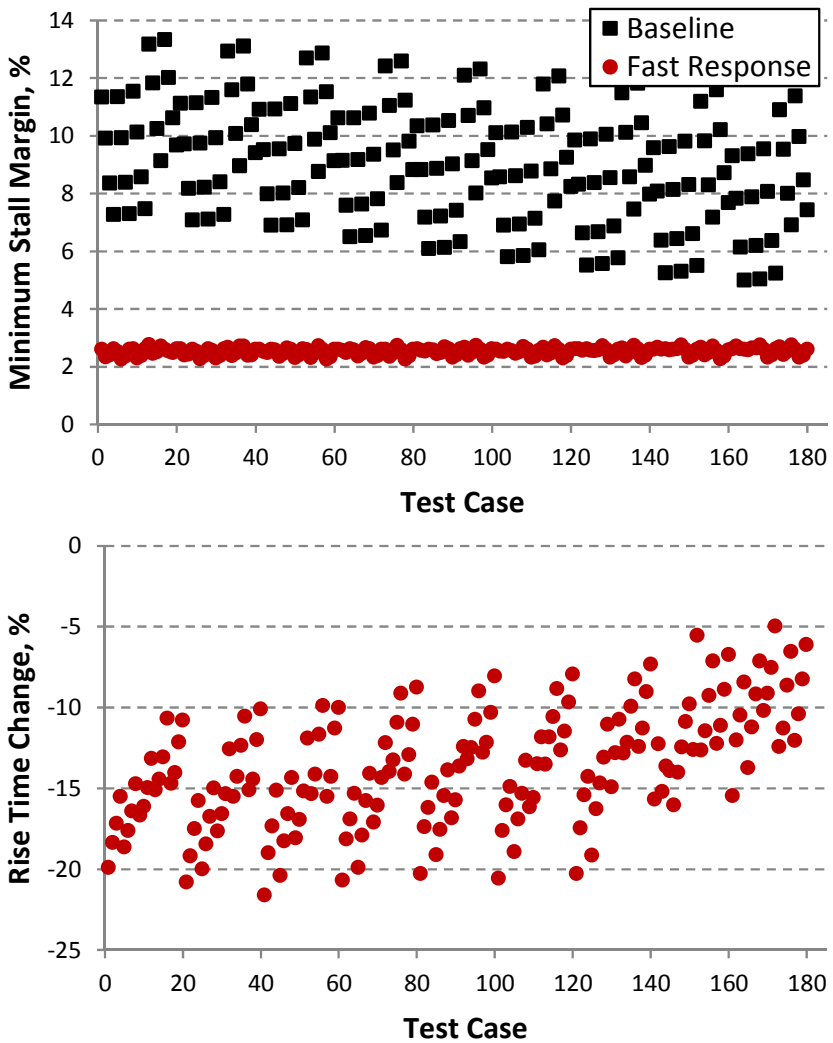

Liu et al., "Design and Demonstration of Emergency Control Modes for Enhanced Engine Performance," 49th AIAA/ASME/SAE/ASEE Joint Propulsion Conference, 2013.

Faster Response: Implementation

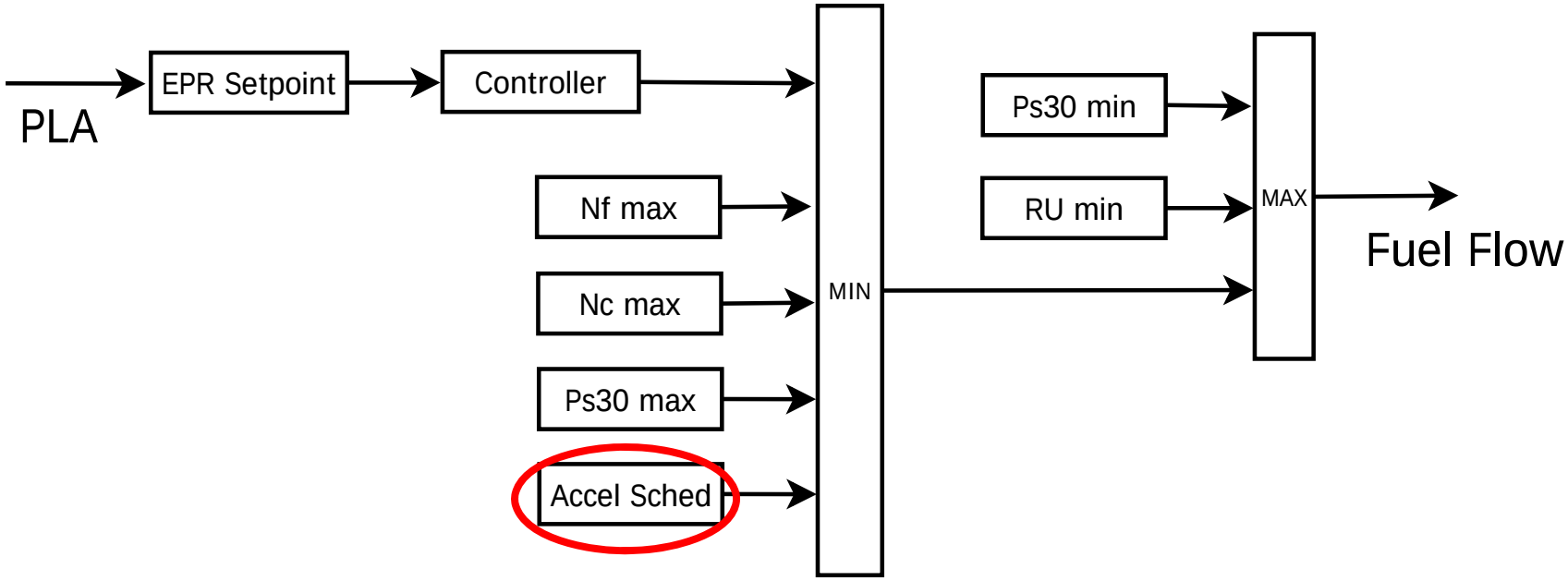

- Shifting acceleration schedule allows for faster dynamic response with lower minimum stall margin
- Iterative search conducted at 60 operating points (0 to 4000 feet, Mach 0 to 0.2, standard to +40°R ambient temperature, new to full deterioration) to determine offset values
- Implementation: 4-D interpolation on operating conditions to determine offset value

- Csank et al., "The Effect of Modified Control Limits on the Performance of a Generic Commercial Aircraft Engine," 47th AIAA/ASME/SAE/ASEE Joint Propulsion Conference and Exhibit, 2011.
- May et al., "Improving Engine Responsiveness during Approach through High Speed Idle Control," 47th AIAA/ASME/SAE/ASEE Joint Propulsion Conference and Exhibit, 2011.

Objectives

- Apply control modes to aircraft simulation
  - Propulsion: Commercial Modular Aero-Propulsion System Simulation 40k (C-MAPSS40k), NASA Glenn
  - Airframe: Transport Class Model (TCM), NASA Langley
  - Piloted flight simulator: Modular Flight Deck (MFD), Precision Flight Controls, Inc.
- Evaluate effectiveness of control modes through simulations of emergency scenarios
- Runway incursions
  - Computer simulation (i.e., autopilot)
- Flight control surface failure
  - Piloted evaluations

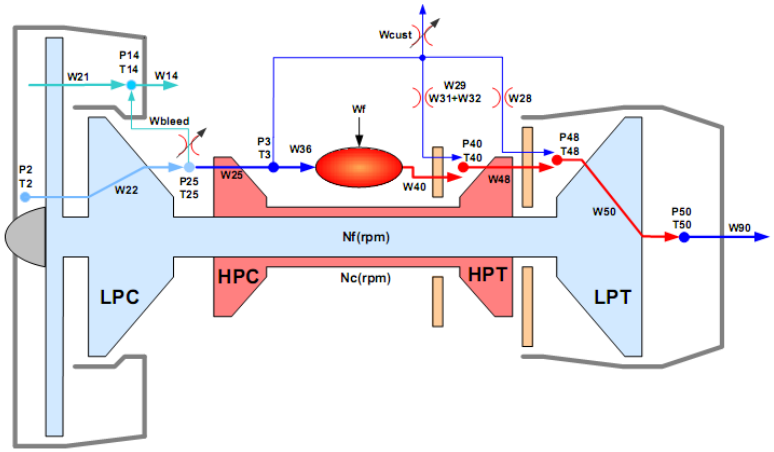

Runway Incursion

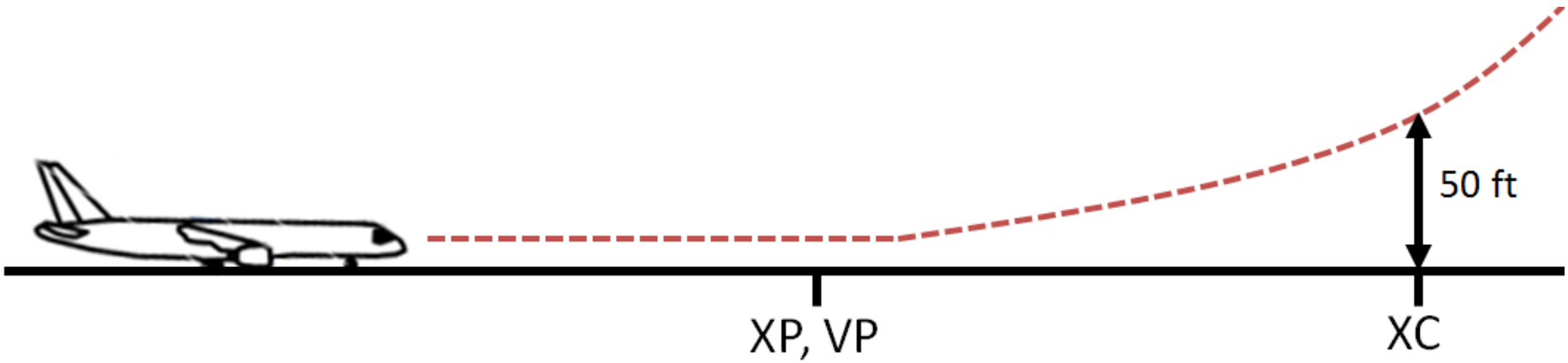

- Aircraft stationary
- Throttles 0 to 90%

- Incursion detected
- Throttles 90% to 100%
- Pull up to 15º pitch

- Aircraft clears 50 feet above ground level (AGL)

Runway Incursion

- Test cases:
  - Baseline vs. enhanced performance
  - New vs. end-of-life (EOL) engines
  - Vary XP (point where incursion is detected)
- Metric: additional distance required to clear 50 feet AGL (XC-XP)
- Greater improvement with earlier detection (but also less useful)
- OT mode with EOL engines nearly recovers baseline/new performance

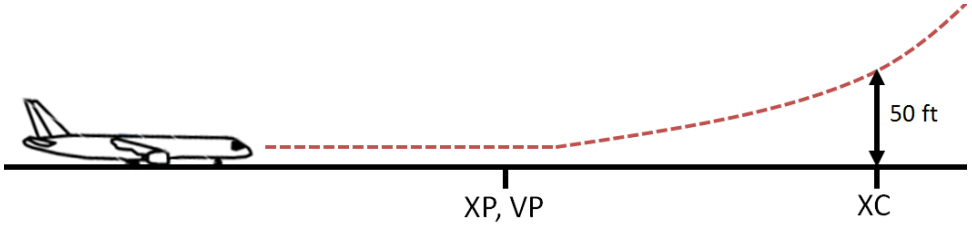

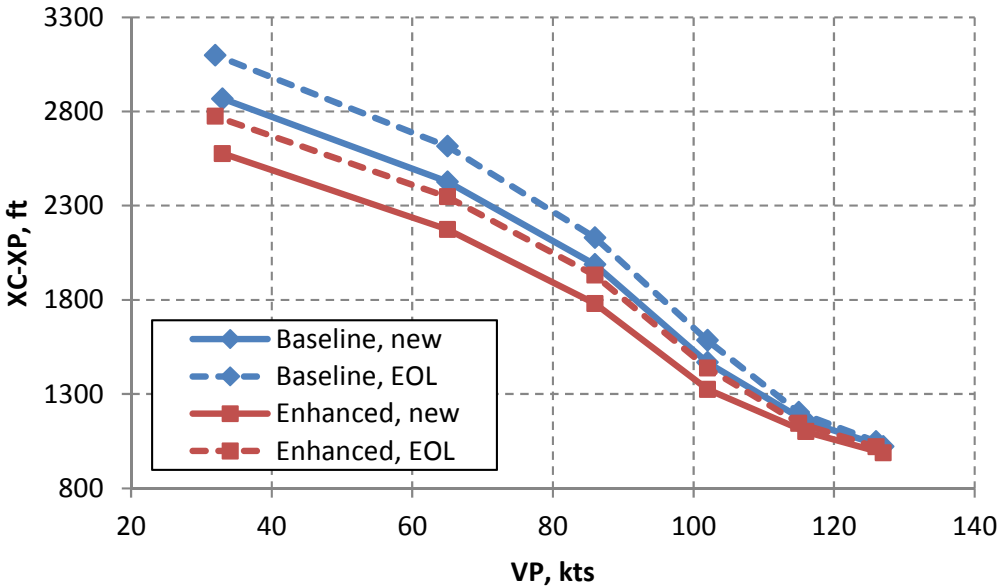

Flight Control Surface Failure

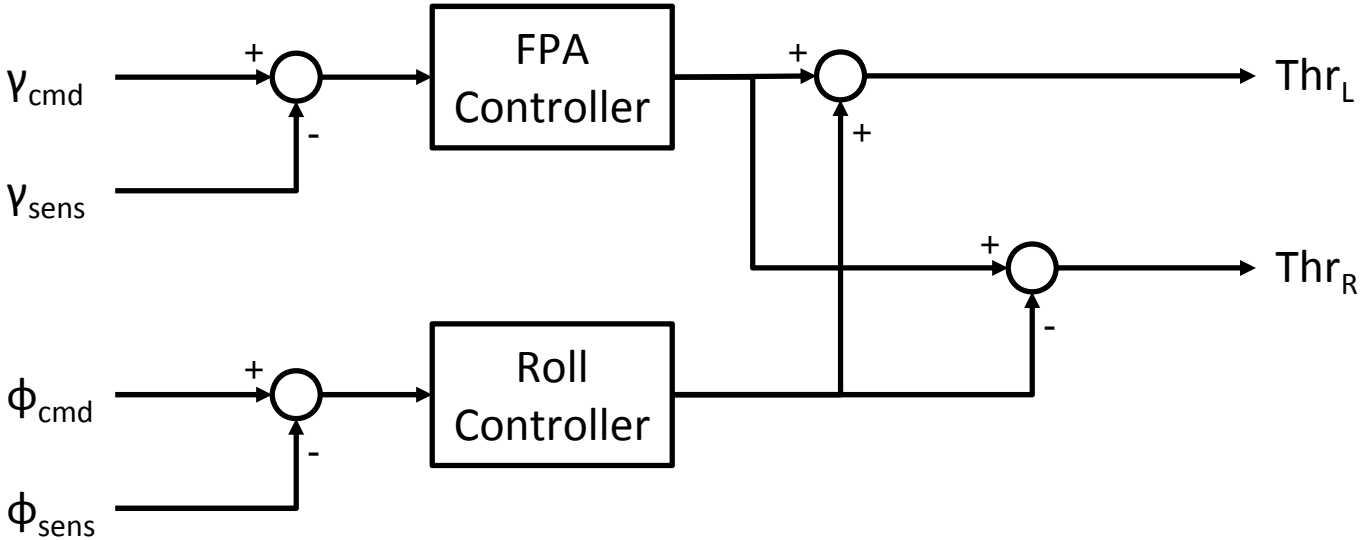

- Failure of all primary flight control surfaces (elevator, aileron, rudder)
- Propulsion Controlled Aircraft (PCA): control system reconfigured to command engine power setting

Burcham et al., "Development and Flight Evaluation of an Emergency Digital Flight Control System Using Only Engine Thrust on an F-15 Airplane," NASA Technical Paper, 1996.

Control Surface Failure: Evaluations

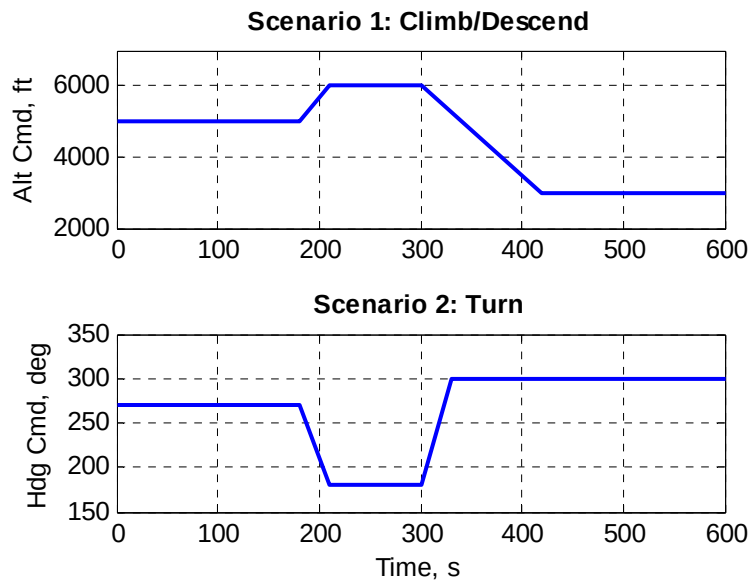

- Evaluations of longitudinal and lateral aircraft maneuverability with baseline and enhanced engines
- Tests conducted by human pilot
- Engine power settings are indirectly controlled through PCA control system

Control Surface Failure
Longitudinal Maneuvers—Piloted

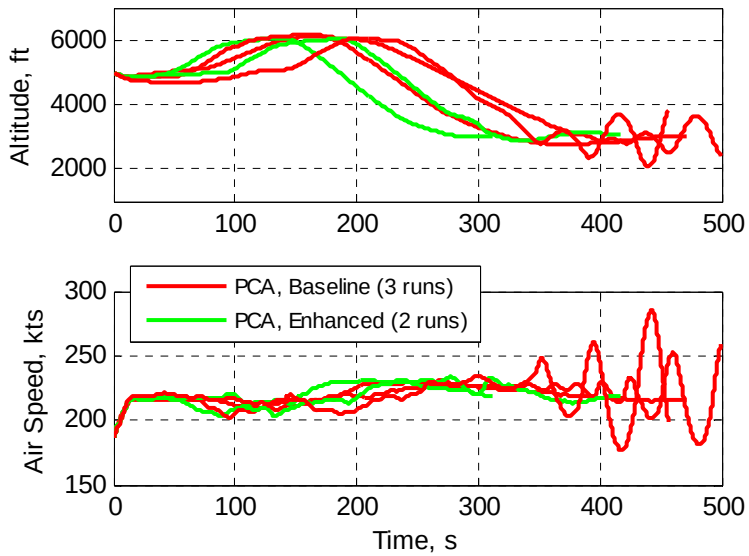

- Maneuver requirements for piloted evaluations
  - Exact trajectory not required
  - Just hit the altitude waypoints (e.g., 5000 feet, 6000 feet, 3000 feet)
- Pilot was aware of control surface failure, but unaware of engine control mode status
- Aircraft control with baseline engines more difficult, though the pilot was able to prevent instabilities for 1 of 3 baseline PCA runs

Control Surface Failure
Lateral Maneuvers—Piloted

- Pilot had to hit heading waypoints (no trajectory requirement)
- No instabilities for baseline or enhanced engines
- Pilot tried to maintain altitude, but not at expense of stability

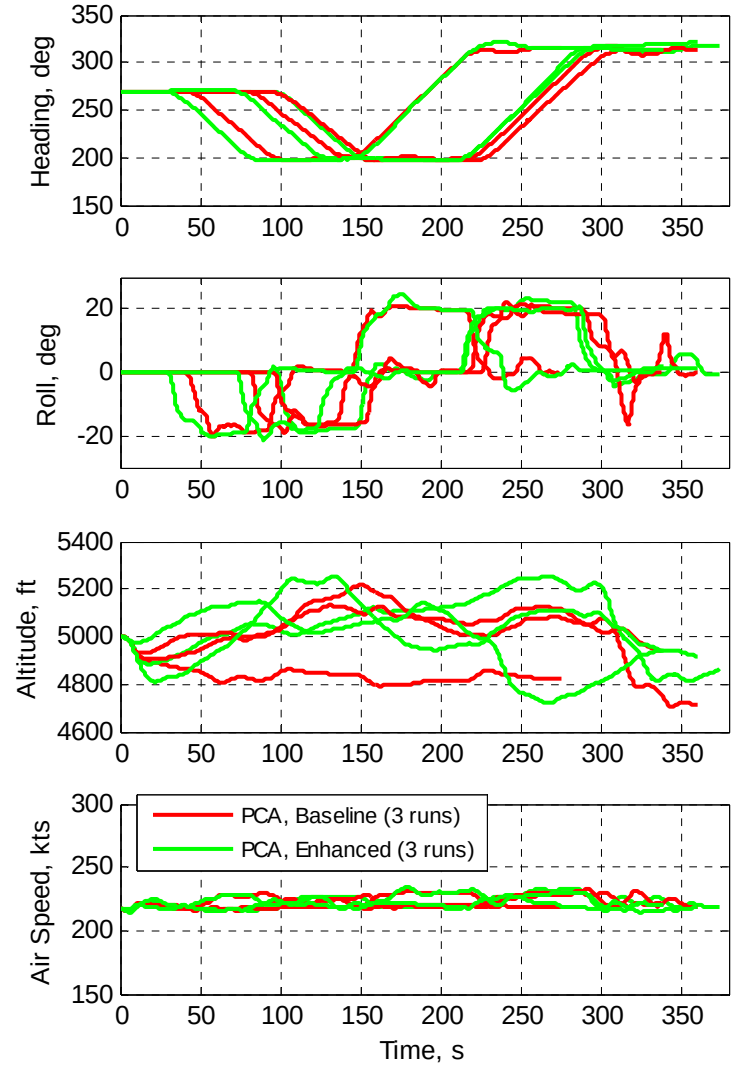

Summary

- Control modes: engine performance enhancements based on failure risk elevation
- Control mode implementation on aircraft/propulsion simulation and flight simulator test bed
- Evaluated control modes using example flight emergency scenarios (runway incursion & flight control surface failure)
- Extra thrust reduces takeoff distance
- Faster response protects against instabilities if aircraft must be maneuvered with engines only

References

- Liu, Y., Litt, J. S., Guo, T.-H., “Design and Demonstration of Emergency Control Modes for Enhanced Engine Performance,” AIAA 2013-3625, 49th AIAA/ASME/SAE/ASEE Joint Propulsion Conference, San Jose, CA, 14-17 July 2013, also NASA/TM—2013-216552, September 2013.
- Liu, Yuan, Litt, Jonathan S., Sowers, T. Shane, Owen, A. Karl, Guo, Ten-Huei, “Application and Evaluation of Control Modes for Risk-Based Engine Performance Enhancements”, AIAA-2014-3637, 50th AIAA/ASME/SAE/ASEE Joint Propulsion Conference, Cleveland, OH, July 28-30, 2014, also NASA/TM—2015-218425, January 2015.