High-Temperature Bulk-CMOS Integrated Circuits for Instrmentation and Control

Steve Majerus, Daniel Goff and Walter Merrill
BluBerry LLC

National Aeronautics and Space Administration

Description

BluBerry, LLC has extended the useful operating temperature range of low-cost, bulk CMOS instrumentation and actuation ICs to greater than 200°C.

Benefits

Patented design approach enables bulk-CMOS based electronics to operate from -55C to 250C

Designs provide better analog performance/accuracy than SOI

ASIC approach minimizes parts count and exploits a large library of existing, proven designs

Bulk-CMOS results in lower cost devices

Easily manufactured using existing processes at large number of foundries, including several in the US

Conservative design rules yield high reliability and long life devices

Motor Control ASIC

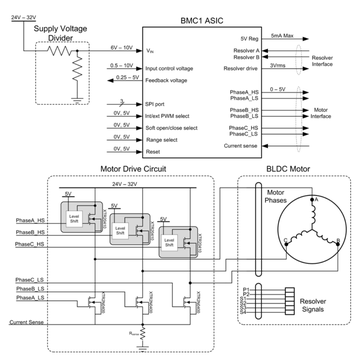

Approach

BluBerry LLC has demonstrated industrial potential for this technology, Bluberry developed application specific integrated circuits to support both conventional and distributed engine controls for aerospace applications. The ICs were fabricated in a conventional, 0.5-µm bulk CMOS process and, in combination with a high-temperature microcontroller, include all the circuits required to form a "smart node" capable of providing local, closed-loop control of an aircraft actuator.

Distributed Control Smart Node

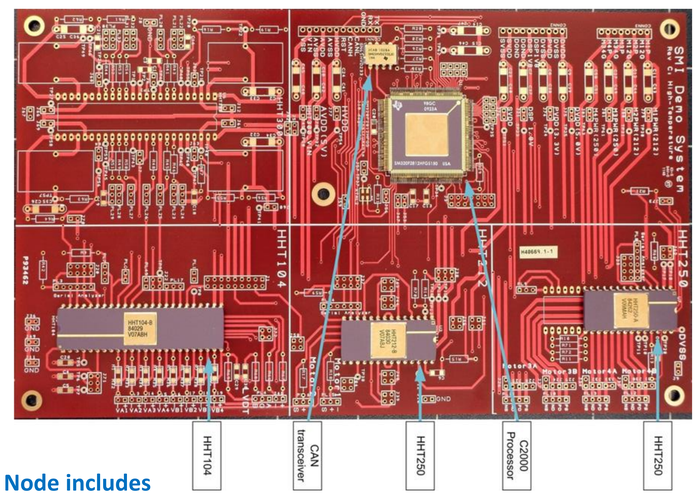

The Smart Node includes

1. **3 custom "HHT"-series ICs**
   - **HHT104 Analog-to-Digital Sensor Interface**
   - **HHT212 Quad 12-bit Current DAC**
   - **HHT250 Programmable Octal PWM Switch**
2. **TI high-temp C2000 processor and CAN transceiver**
3. **Actuator control software**
4. **Off-board representative loads**
   LVDT, thermocouple, RTD, motor

Recent Results

Operation of the circuits has been demonstrated from -55 to 200°C on representative flight hardware.

Reliability testing has shown that the custom ICs can withstand continuous operation at elevated temperatures for more than 4,500 hours with negligible performance shift.

- LVDT position measurement accuracy within +/- 2%
- Minor (6%) increase in quiescent current
- Bluberry ASICs still functional after 4700 hours of operation at temperature

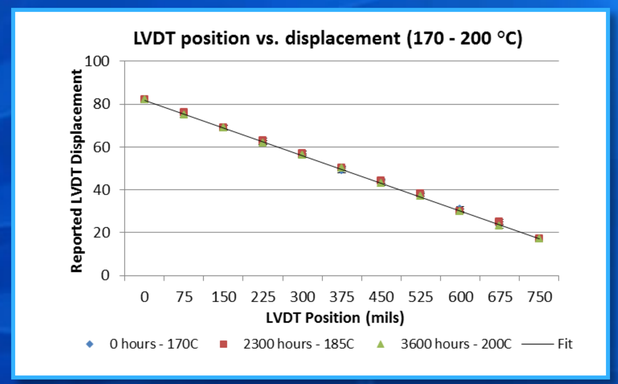

Future Work

BluBerry LLC has developed a motor control ASIC.

The motor control ASIC will control a brushless DC motor through a motor drive circuit and accept resolver feedback.

Packaging and testing of the circuit is underway

Propulsion Control and Diagnostics
NASA Glenn Research Center
Controls and Dynamics Branch

Contact:
Walter Merrill
wcmerrill@roadrunner.com
Phone: 440-328-5832