Decentralized Engine Control System Simulator (DECSS)

February 28, 2012

©2009 Rolls-Royce North American Technologies Inc

DECSS Agenda

- Program Objectives
- System Structure
- Program Schedule
- Questions

©2009 Rolls-Royce North American Technologies Inc

DECSS Objectives

- Decentralized engine control Design, Development, Testing, and Integration Environment that is:
  - Flexible
  - Easily Configurable
  - HARD REAL-TIME Capable
  - Able to support Hardware-In-the-Loop (HIL) or Fully Simulated systems
- Build with COTS components with open-source access
- Utilize MatLab Simulink as the primary modeling environment
- Provides interface to accommodate user developed simulations and hardware for both system and component evaluation

Program Developed with DECWG Support

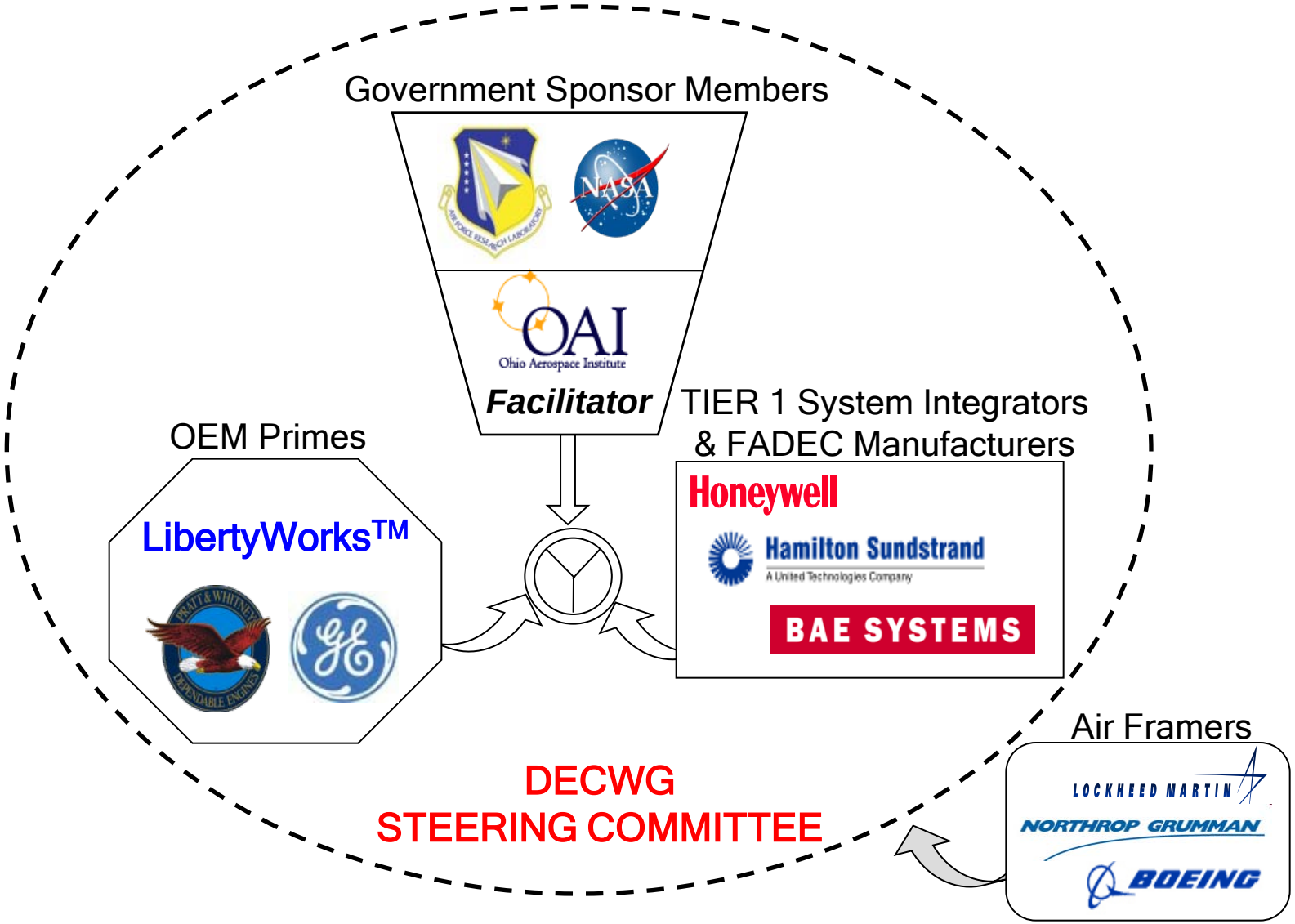

DECSS Core Concept

MathWorks SimWorkbench based

Common multi processor computing core running RTOS

Hot-Swap Removable Mass Storage Drives (key locked drive bay door)

Auxiliary Interface connection panel for Hardware in Loop connections

Electrical protection via UPS

Lockable wheels OR non-scratch legs

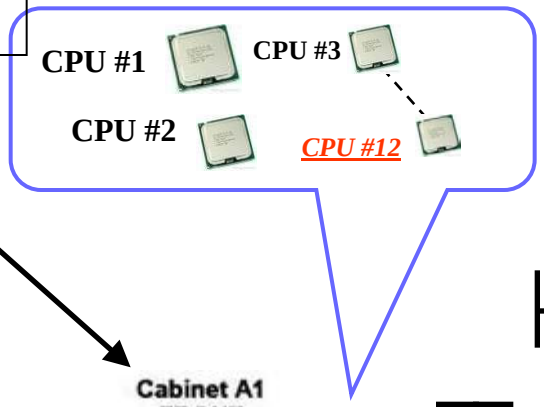

Use communication elements to stimulate HIL physical interfaces

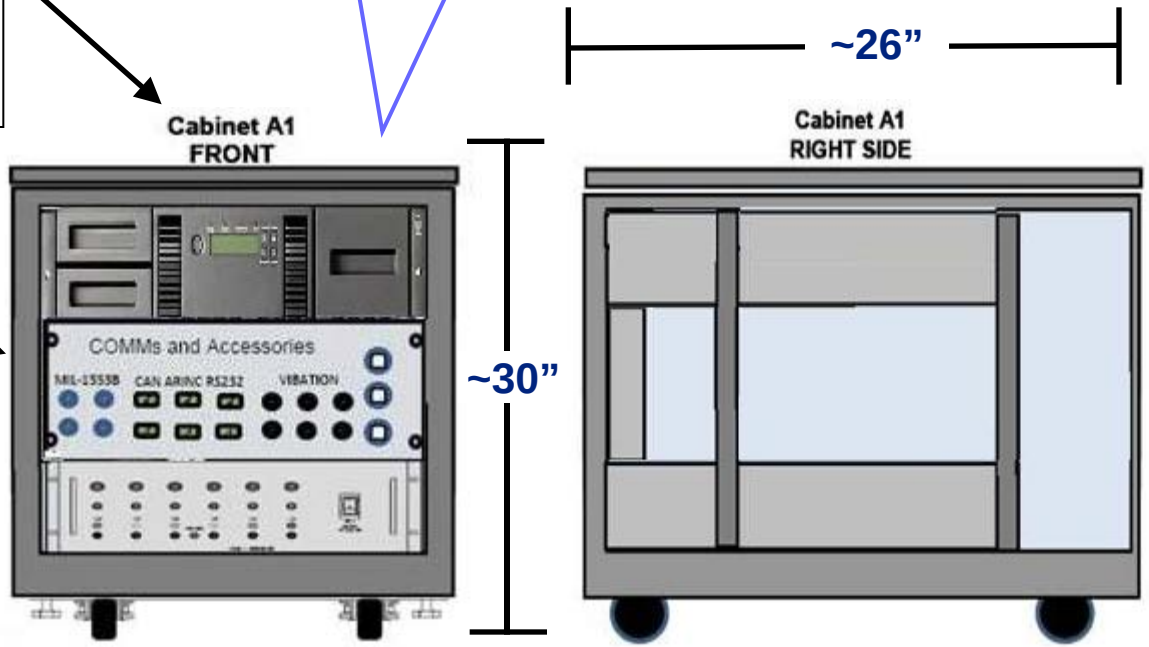

All HIL insertion via digital communication interface

Full Simulation Mode

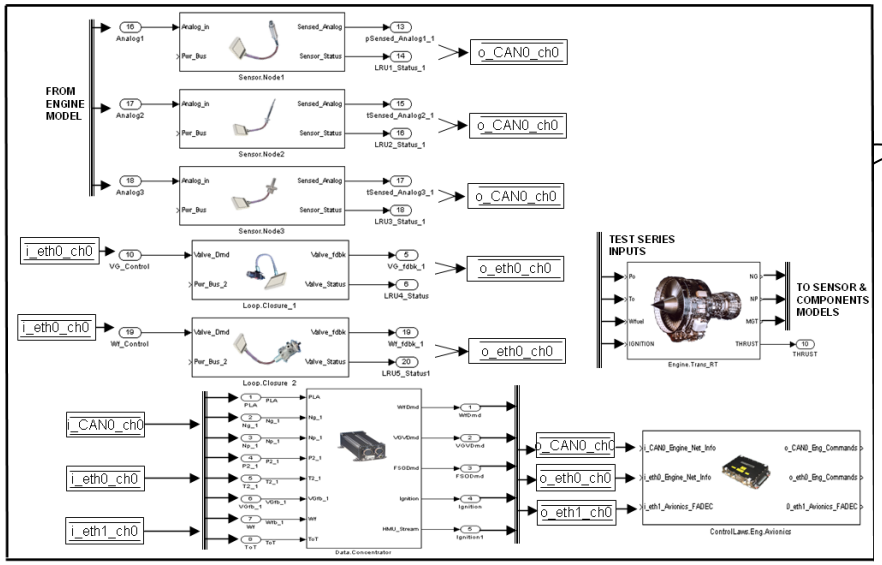

Real-Time Computer Running User Simulation

DATA BUS: Ethernet, CAN/LIN/ARINC 825, RS-485, with expansion capability for MIL-STD-1553B, ARINC-429, ARINC-664/AFDX, etc

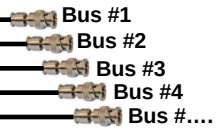

Highly flexible / expandable data bus environment

DECSS Real-Time HIL Mode

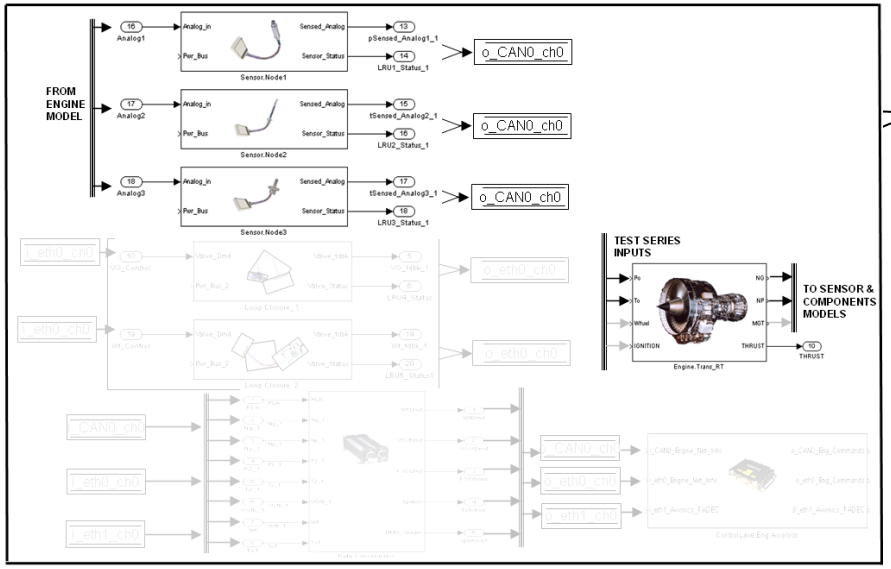

Real-Time Computer Running User Simulation

DATA BUS: Ethernet, CAN/LIN/ARINC 825, RS-485, with expansion capability for MIL-STD-1553B, ARINC-429, ARINC-664/AFDX, etc

Test Article insertion / Hardware In-the-Loop

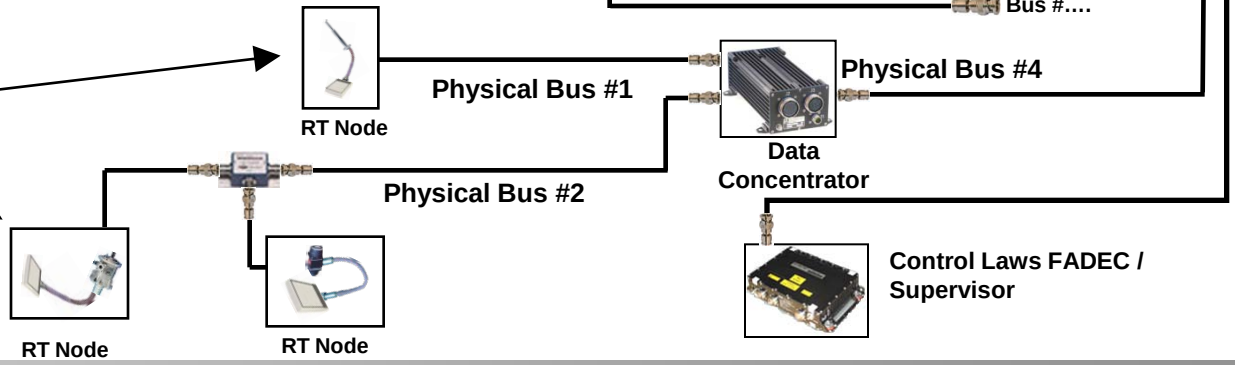

DECSS Detail – User Interface

- Graphical User Interface

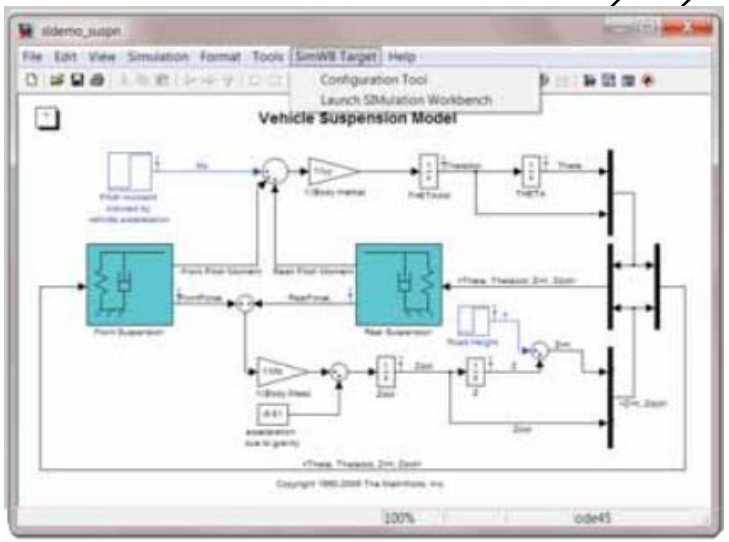

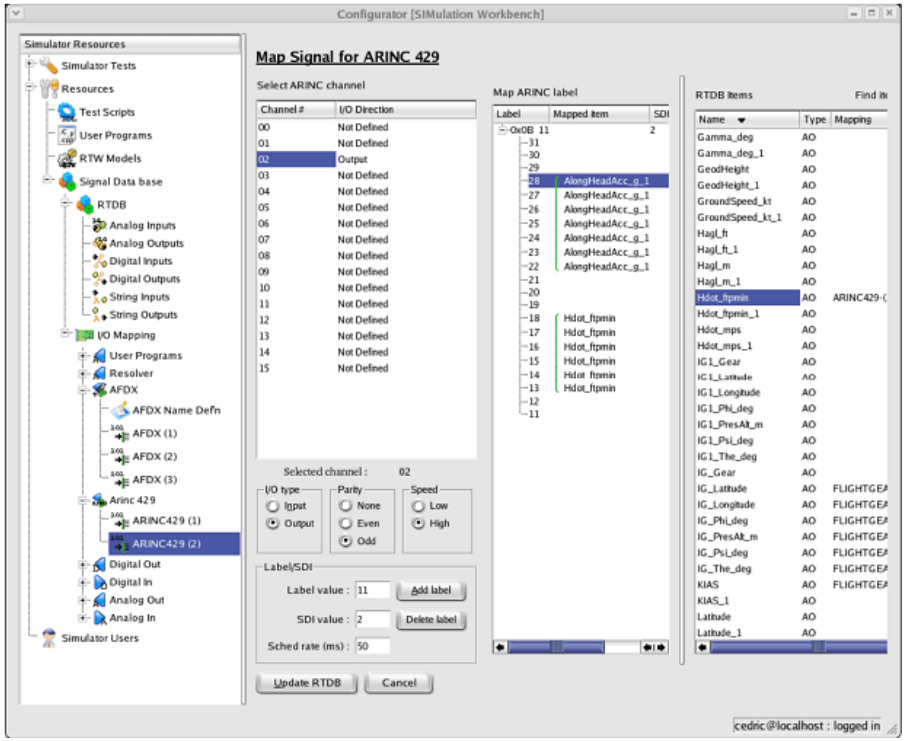

Models (Simulink, C-code, FORTRAN) imported to interactive configuration tool using Simulink engine

Point and click connection between model 'Points of Interest' and simulator hardware interfaces

Example Distributed System (Ring Communication Loop)

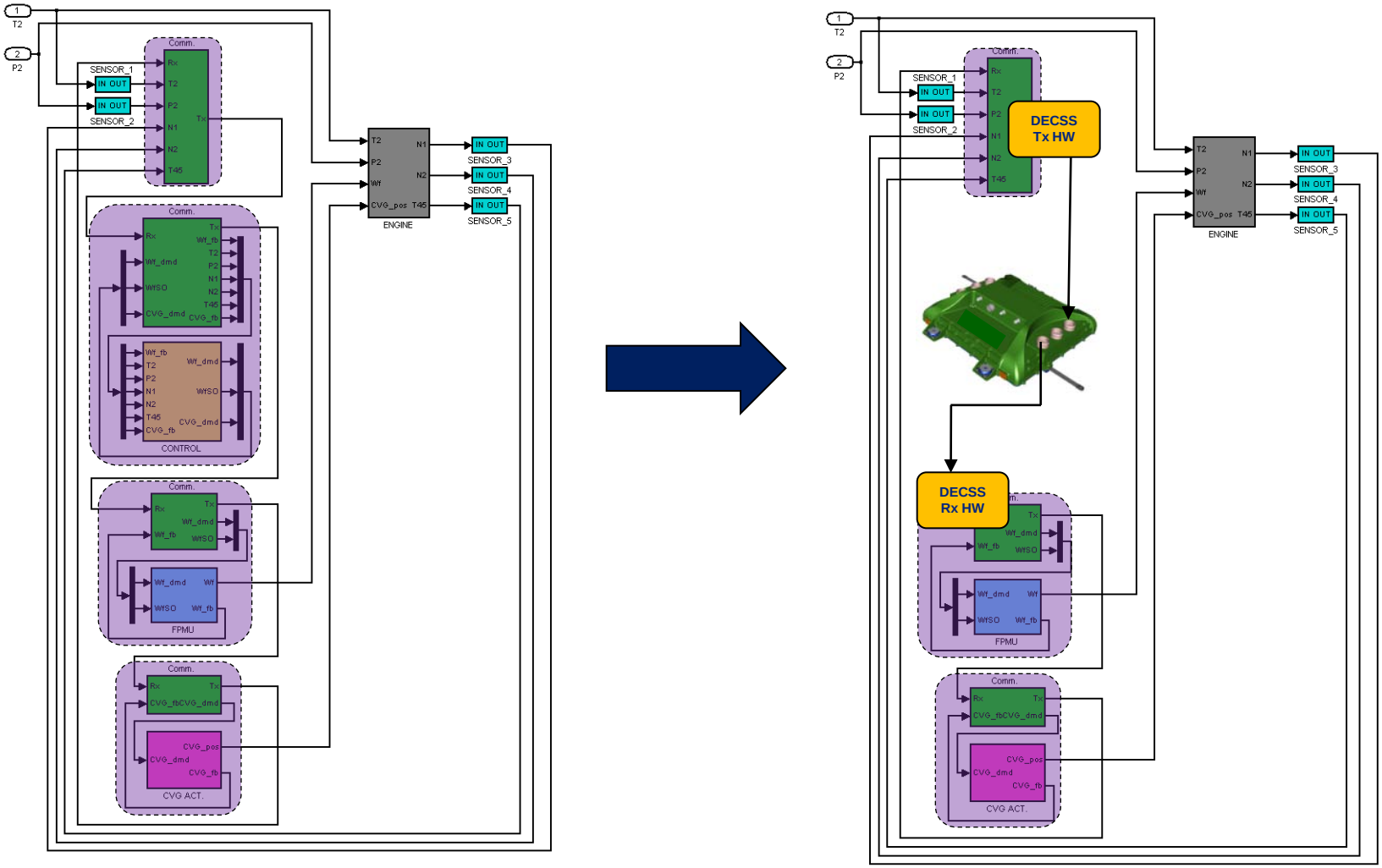

HIL is inserted into the DECSS communication loop

DECSS Detail – Plant Model

Engine System Models

- The initial engine plant model will be based on the NASA Commercial Modular Aero-Propulsion System Simulation 40k (C-MAPSS40k) or equivalent
- Dedicated high-performance processors will accommodate simultaneous operation of multiple engine models with advanced features in real time

- <u>NOTE:</u> Engine model(s) must be capable of running Real Time

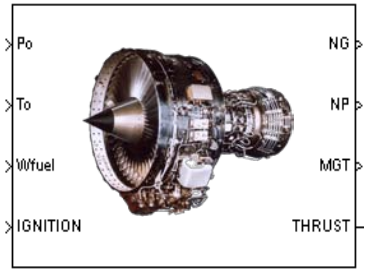

Engine.Trans_RT

DECSS is built for user-developed engine plant models

DECSS Detail – Control System Models

Control System Models

- Delivered with initial control system model based on the NASA Commercial Modular Aero-Propulsion System Simulation 40k (C-MAPSS40k) or equivalent
- The nominal control system able to accommodate multiple control modules (e.g. dual-channel, tri-channel), whether those modules are all simulated, partially simulated, or completely HIL.
- The nominal control system will be flexible so that its modules can be separated and/or aggregated as required for the system under test.

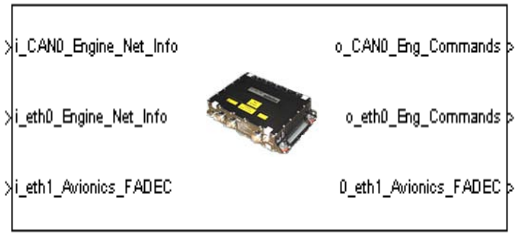

DECSS presents a flexible platform for user- developed decentralized control system evaluation

DECSS Detail – Sensors & Actuators

Sensor and Actuator Models

- All sensor, actuator, or other component models communicate via a digital data bus to the control
  - Analog signals must pass through a data concentrator to communicate via a digital data bus to the control
- Component model(s) will be easily replaced with real device(s) for HIL evaluation

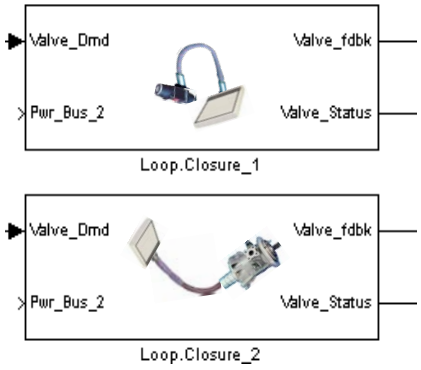

DECSS will be delivered with a "standard" sensor library

Data Message Formats

MIL-STD1553 (future)

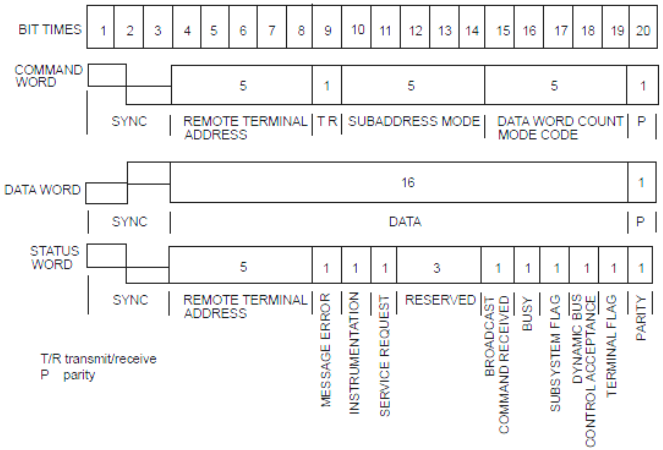

ARINC 429

ARINC 429 data words are 32 bit words made up of five primary fields:

- Parity – 1 bit
- Sign/Status Matrix (SSM) – 2 bits
- Data – 19 bits
- Source/Destination Identifier (SDI) – 2 bits
- Label – 8 bits

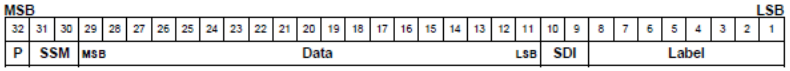

ARINC 429 32 bit Word Format

Ethernet

Preamble	Ethernet Address of Destination	Ethernet Address of Sender	Packet Length	Message Data	Error Checking Information
64 bits	48 bits	48 bits	16 bits	368-12K bits	32 bits

- PREAMBLE IS JUST A SEQUENCE OF 01010...0101 USED TO SYNCRHONIZE RECEIVER'S CLOCK.
- ETHERNET ADDRESSES ARE 48 DIGIT BINARY NUMBERS (THIS MACHINE IS 00:05:02:75:7C:68 OR 00000000,00000101,00000010,01110101,01111100,01101000)

CANbus (2.0a and 2.0b)

Standard CAN

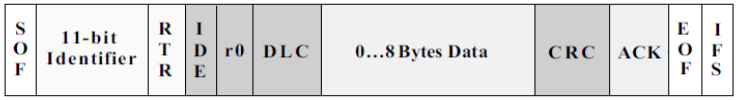

Extended CAN

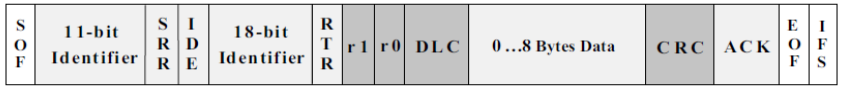

Extended CAN: 29-Bit Identifier

Multiple data communication options available - modeled and physical

DECSS Schedule

- Three-year program – initiated June 2011
  - Year 1
    - Industry circulated and approved System Requirements
    - Architecture definition
  - Year 2
    - Detail design and evaluation on LibertyWorks hardware
      - ⇨Implement and refine architecture
      - ⇨Develop user interface (GUI)
      - ⇨Incorporate base plant, control, sensor & effector models
  - Year 3
    - Assemble, test and deliver system to NASA GRC
      - ⇨Continued interface and model refinement
      - ⇨Assembly and test
      - ⇨Author user manual
      - ⇨Install and commission at GRC

QUESTIONS?