National Aeronautics and Space Administration

Hypersonic Propulsion Control

Propulsion System Simulations

Thomas J. Stueber

NASA Glenn Research Center at Lewis Field, Cleveland, Ohio

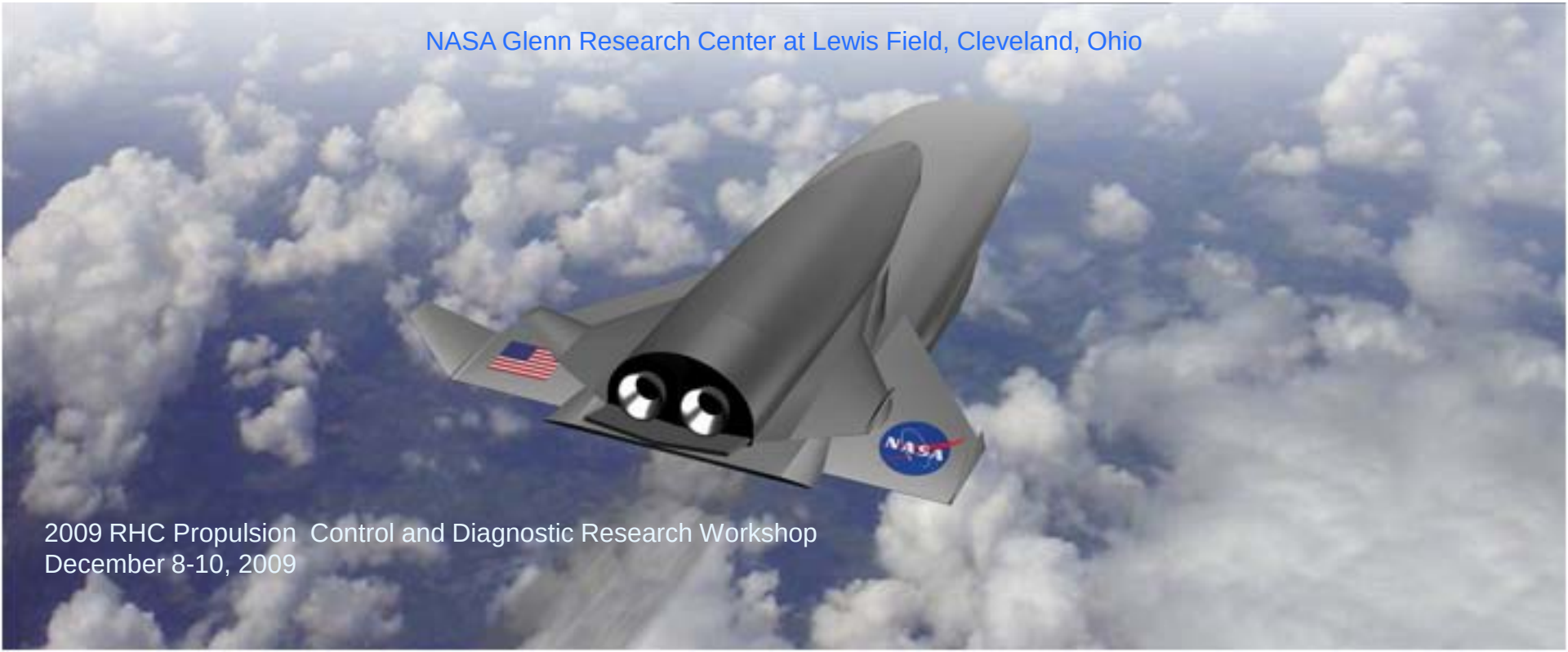

2009 RHC Propulsion Control and Diagnostic Research Workshop
December 8-10, 2009

Hypersonic Propulsion Control

Propulsion System Simulations

Multiple Parallel Paths Developing Simulations

- SPIRITECH NRA
- LAPIN in the Loop
- Interactive Simulation
- Aeroservo Simulation

Tools

- System Identification Experiment

Truth Model CDM

Interactive Simulation

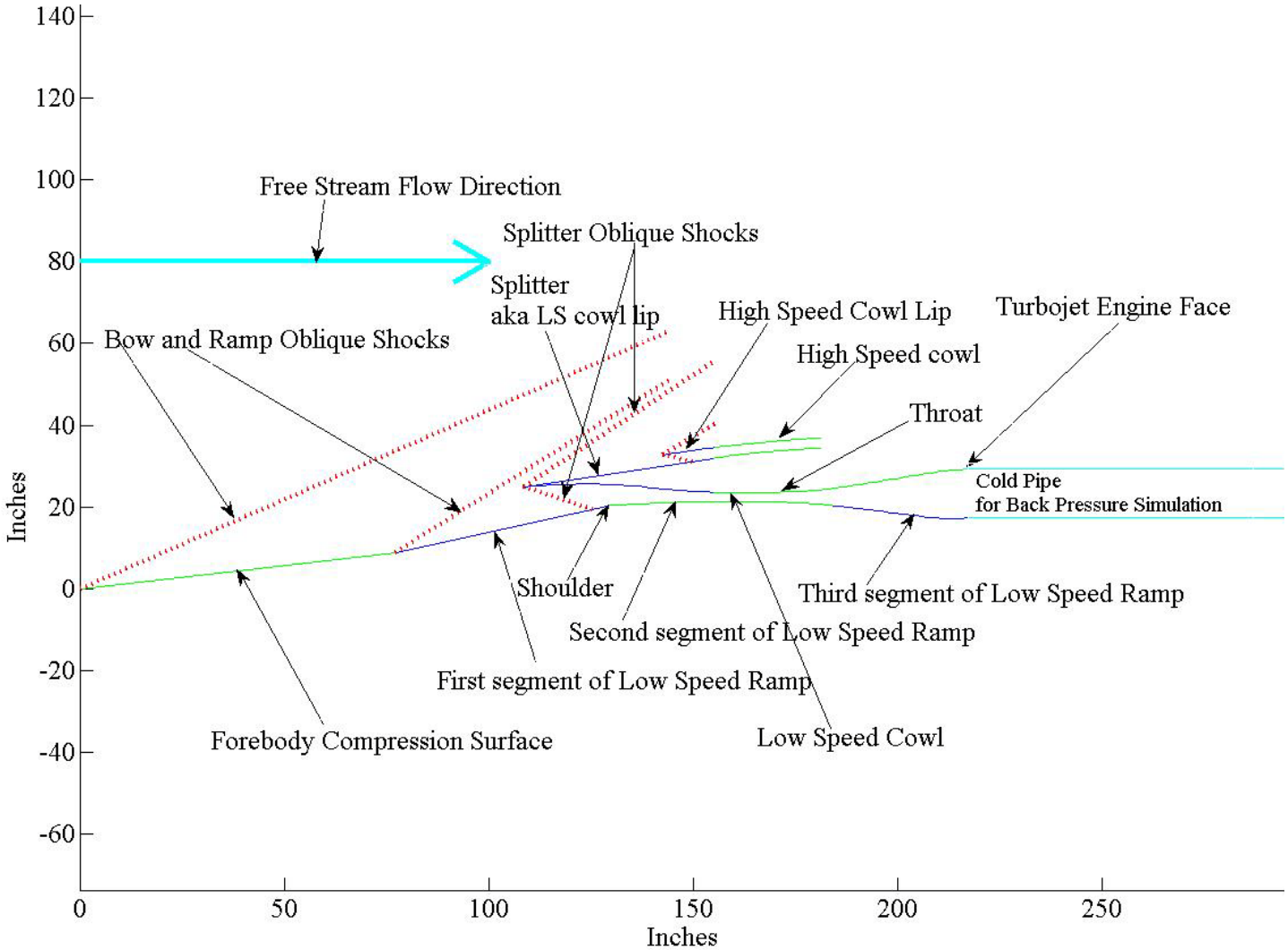

Interactive Simulation

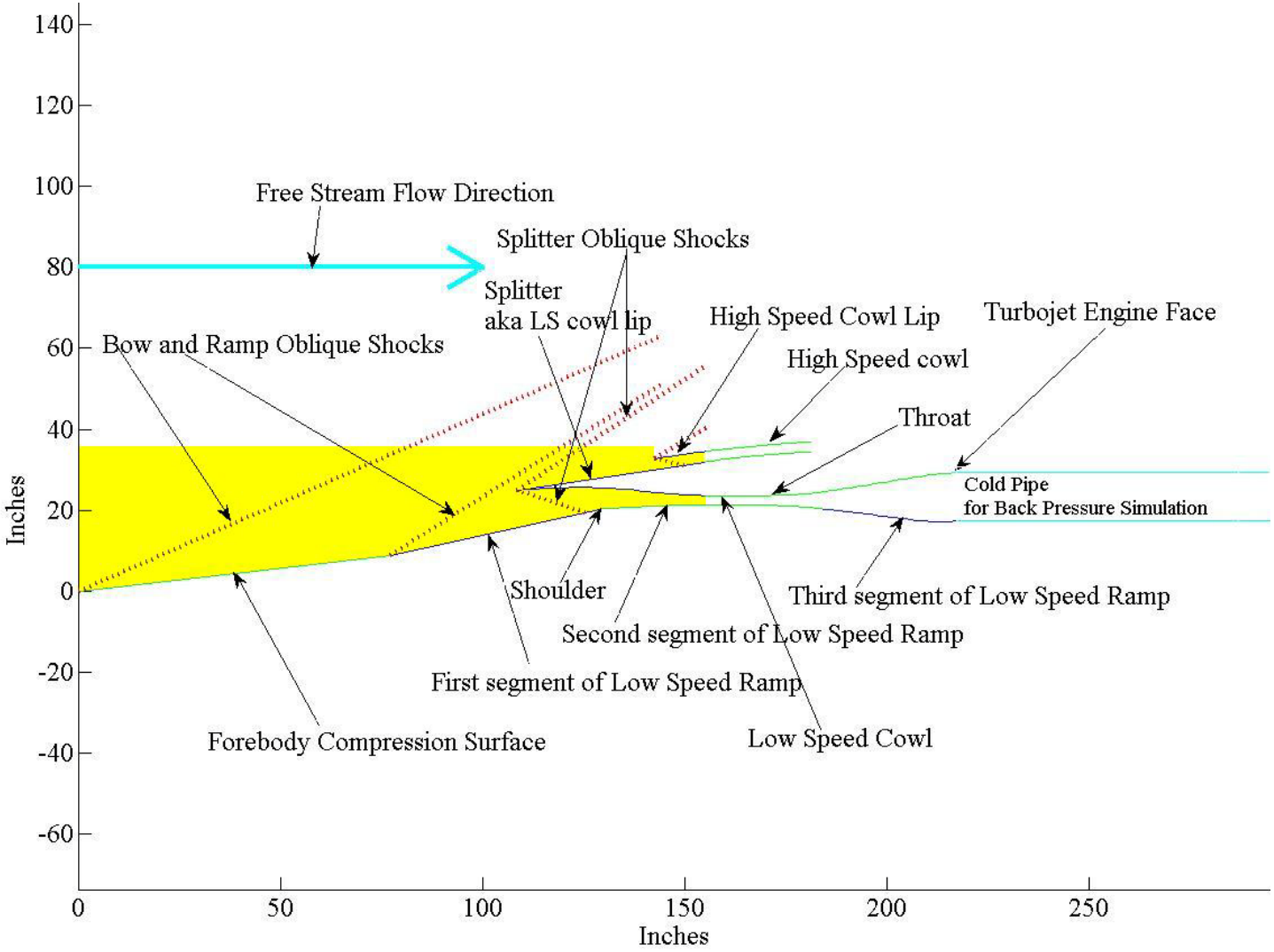

Interactive Simulation

High Speed Flow Path

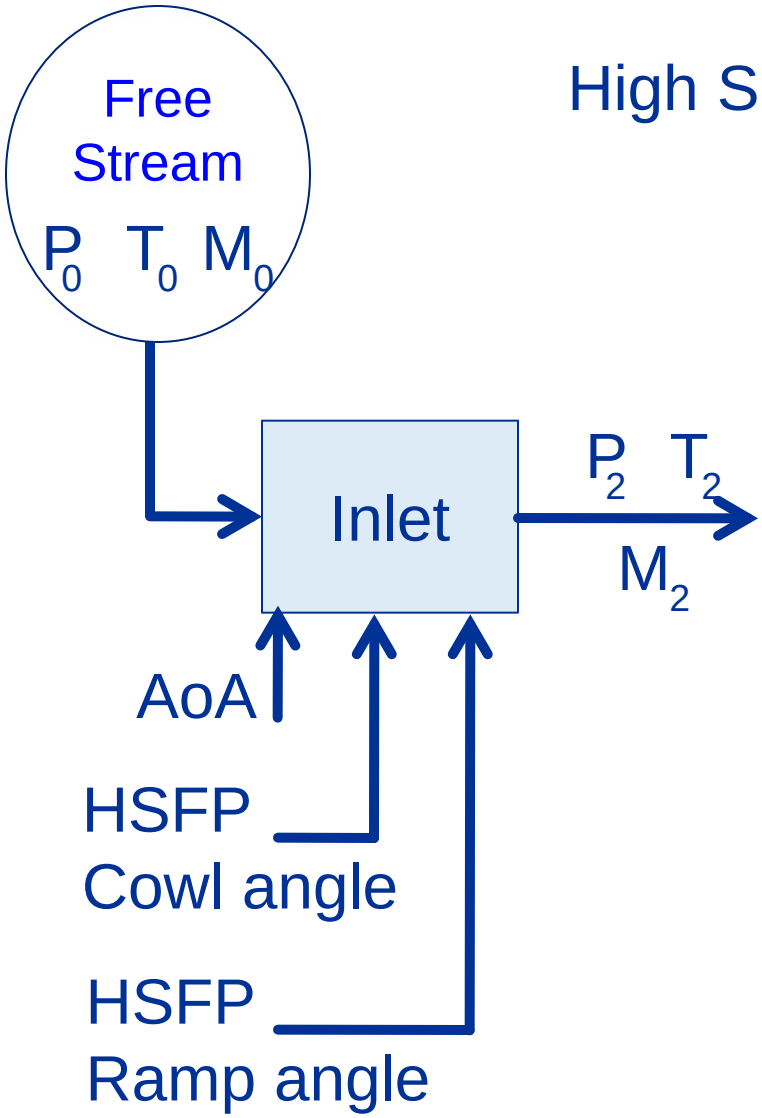

Interactive Simulation

High Speed Flow Path

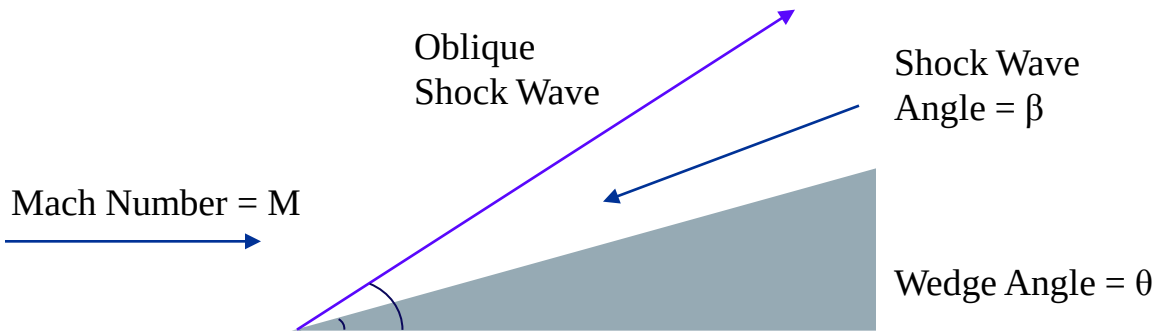

<u>Oblique Shock Wave Relation</u>

$$\tan(\theta) = \frac{2\cot(\beta)\left[M^2 \sin^2(\beta) - 1\right]}{M^2\left(\gamma + \cos(2\beta)\right) + 2}$$

γ = ratio of specific heat capacities

Source: "Equations, Tables, and Charts for Compressible Flow," NACA Report 1135, Ames Aeronautical Laboratory (1953).

Interactive Simulation

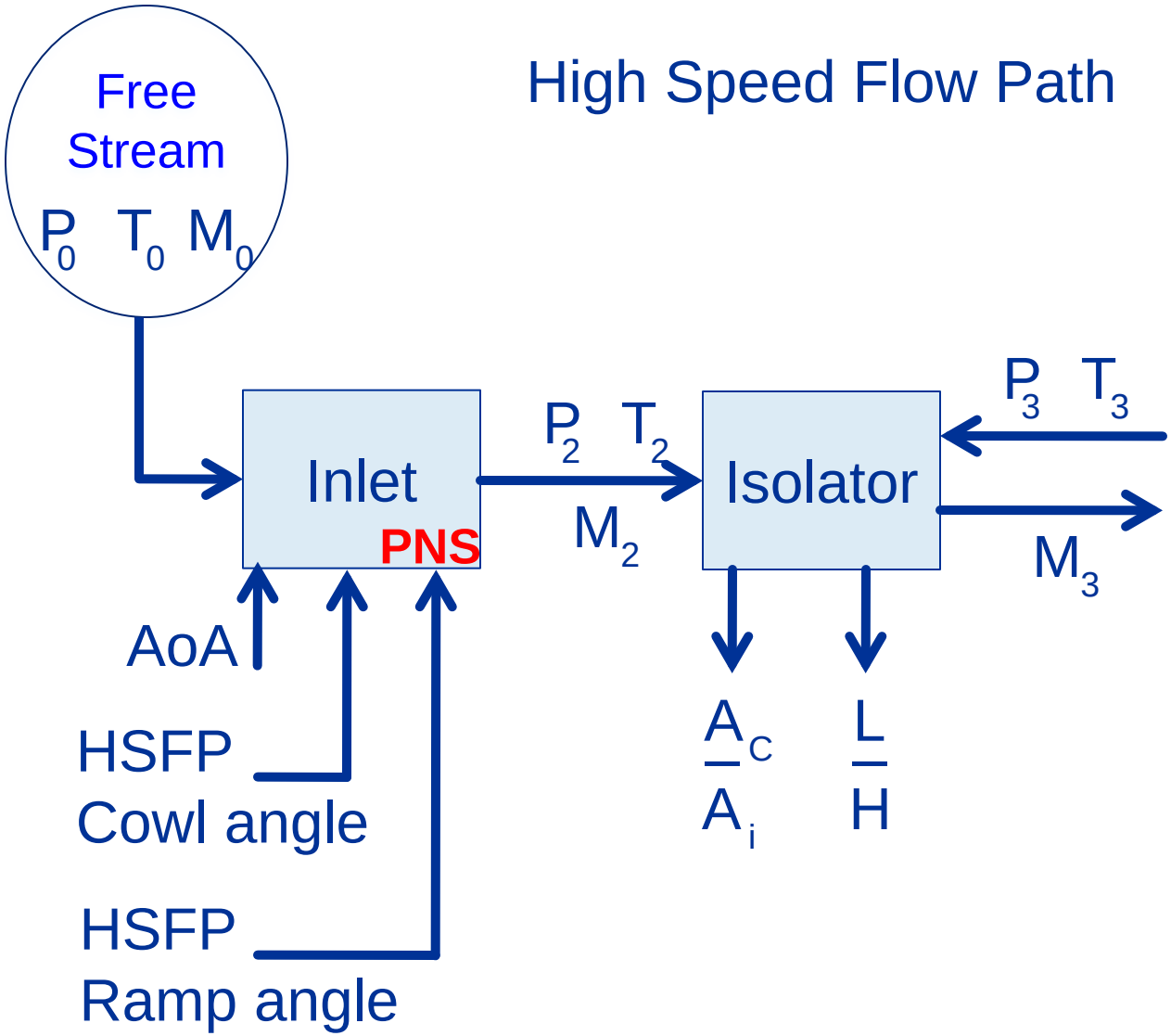

Interactive Simulation

$$M_3 = \left[\frac{\gamma^2 M_2^2\left(1+\frac{\gamma-1}{2}M_2^2\right)}{\left(1+\gamma M_2^2 - \frac{p_3}{p_2}\right)^2} - \frac{\gamma-1}{2}\right)\right]^{-1/2}$$

$$\frac{A_{core}}{A_{isolator}} = \frac{1}{\gamma M_3^2}\left[\frac{p_2}{p_3}(1+\gamma M_2^2) - 1\right]$$

$$\frac{L}{H} = \frac{\left(\frac{m}{H}\right)^{1/2}}{\sqrt[4]{R}} \cdot \frac{\left[50\left(\frac{p_3}{p_2}-1\right)+170\left(\frac{p_3}{p_2}-1\right)^2\right]}{(M_2^2 - 1)}$$

m – momentum thickness of boundary layer

R – Reynolds number

H – duct height

Source: W.H. Heiser, D.T. Pratt, D.H. Daley, and U.B. Mehta, *Hypersonic Airbreathing Propulsion*, AIAA Education Series, Washington, DC, 1994.

P.J. Waltrup and F.S. Billig, “Prediction of Precombustion Wall Pressure Distributions in Scramjet Engines,” Journal of Spacecraft and Rockets, Vol. 10, No. 9, September 1973.

Interactive Simulation

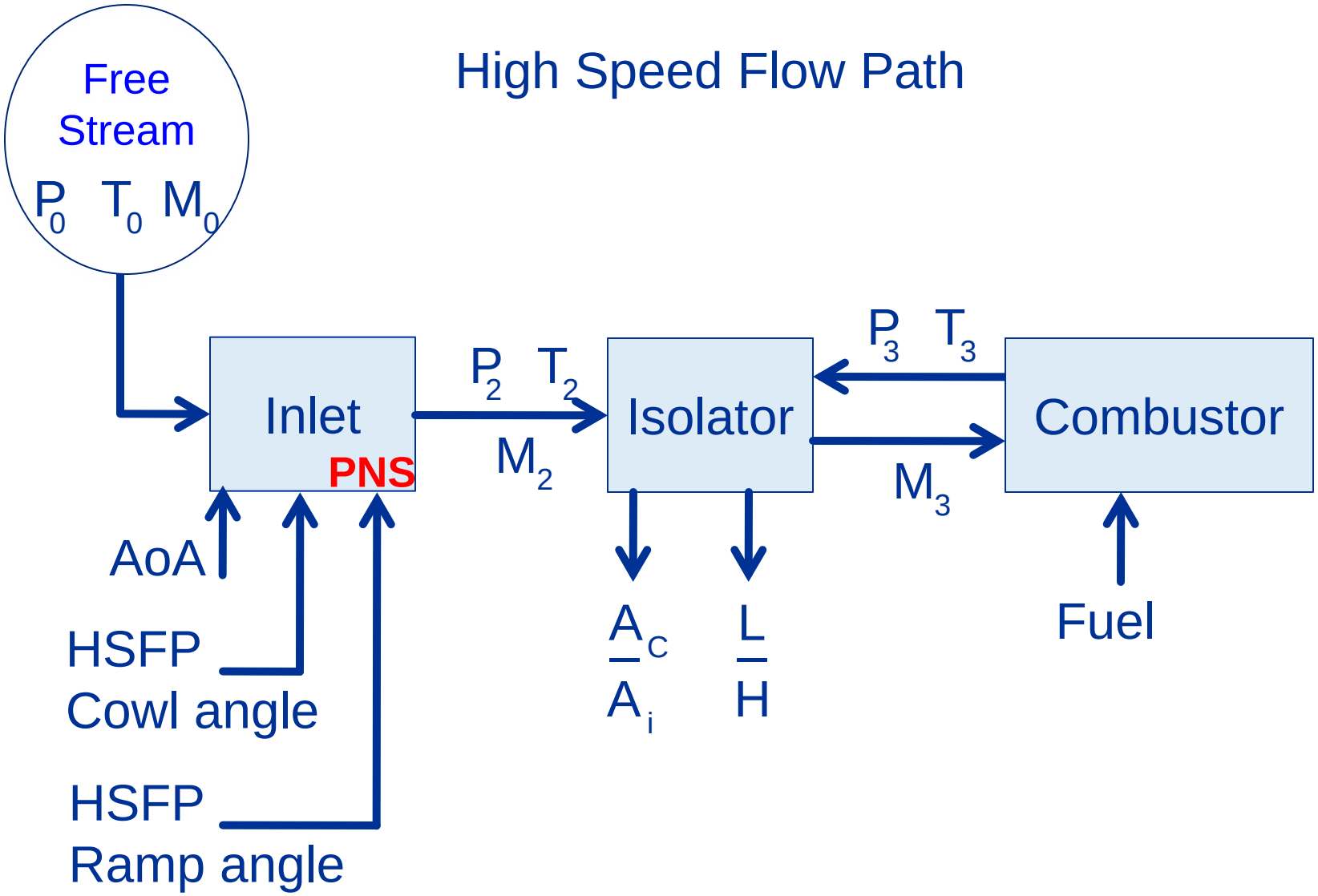

Interactive Simulation

$$f = \left(\frac{\varepsilon\, h}{c_p (T_{tc} - T_{t0})} - 1\right)^{-1}$$

f – fuel to air ratio

ε – combustion efficiency

h – fuel heating value

c_p – specific heat capacity (constant pressure)

T_{tc} – total temperature (combustor)

T_{t0} – total ambient temperature

Source: R.D. Zucker, *Fundamentals of Gas Dynamics*, Matrix Publishers, Inc., Champaign, IL, 1977.

SPIRITECH NRA Award

HiTECC (High-Mach Transient Engine Combined Cycle) Dynamic Simulator

- Dynamic numerical models of the physical systems
  - Propulsion System
  - Thermal Management/Fuel System
  - Hydraulics & Kinematics Systems
- Robust control system for operating modes being demonstrated
- Physical models interact with one another and provide transient response to inputs provided by the controls system
- Manage User Input and Output
- First-Order Fidelity to Minimize Simulation Time
  - Simple, Robust, Zero- and One-Dimensional Models
  - Steady-State Models where response times expected to be low relative to other components
- Modular on Sub-System Level to Facilitate Model Exchanges
  - Example: Exchange 0D Inlet Model with 2D CFD Model
- Modular on Component Level to Facilitate Configuration Changes
  - Example: Reconfigure, Add, or Remove Actuators

SPIRITECH NRA Award

Simulation Code Developed in MATLAB™ / Simulink™/ Simscape™ Environments

- MATLAB Provides Data Management
- Simulink™ Foundation of the Models
- Simscape™ Provides Enhanced Physical Modeling Capabilities within Simulink™
- m-functions developed with MATLAB™ provide capabilities beyond the Ordinary Differential Equation Limits of Simulink™
- Proven numerical solver (low-risk)
  - Selected Solver **ode14x**
  - Fixed-step
  - Acceptable performance for both Simscape™ and Simulink™ models

HiTECC

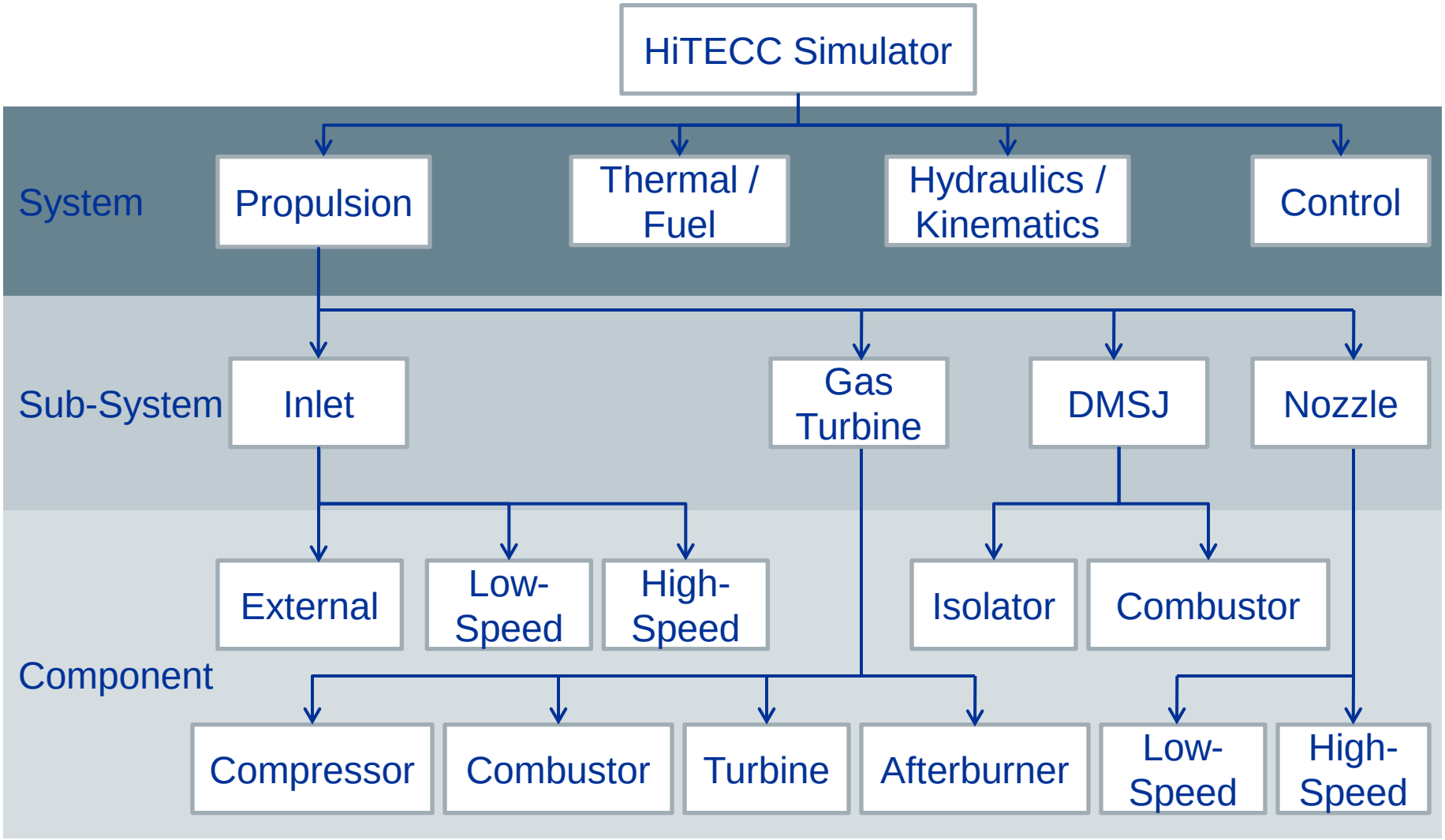
HiTECC Simulator
System
Propulsion
Thermal / Fuel
Hydraulics / Kinematics
Control
Sub-System
Inlet
Gas Turbine
DMSJ
Nozzle
Component
External
Low-Speed
High-Speed
Isolator
Combustor
Compressor
Combustor
Turbine
Afterburner
Low-Speed
High-Speed

Systems Descriptions
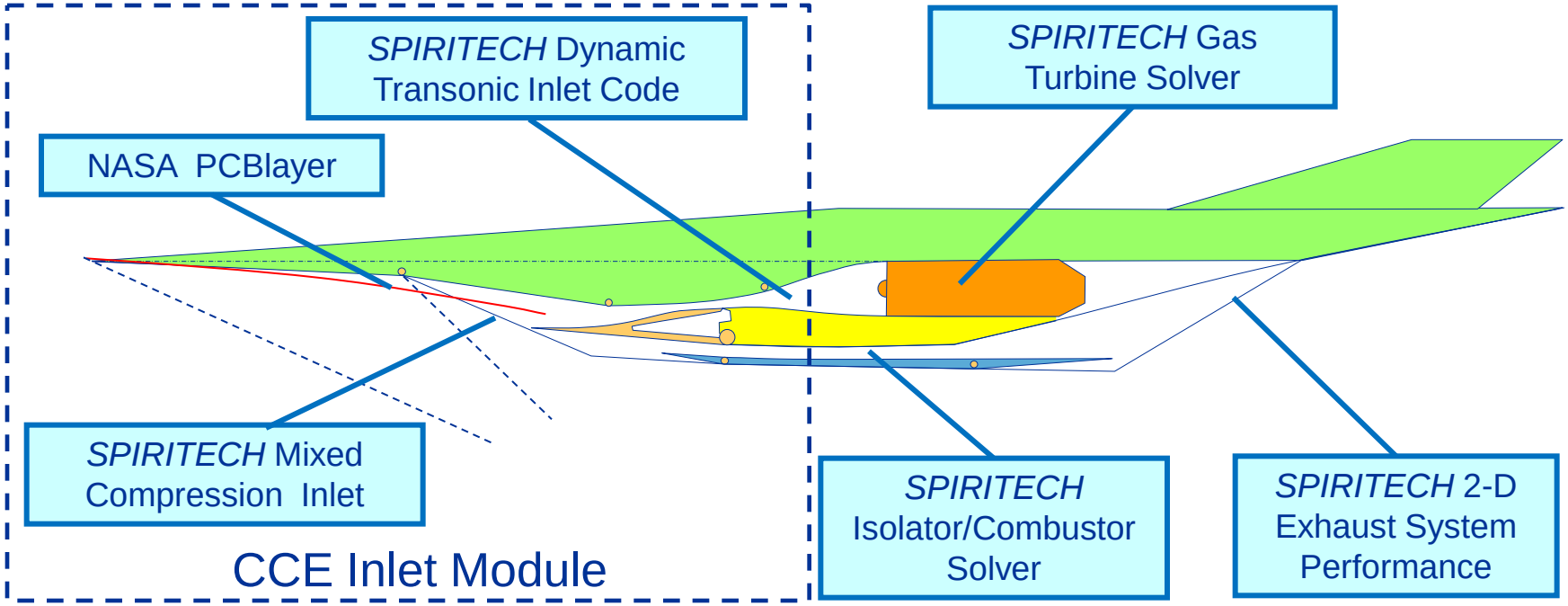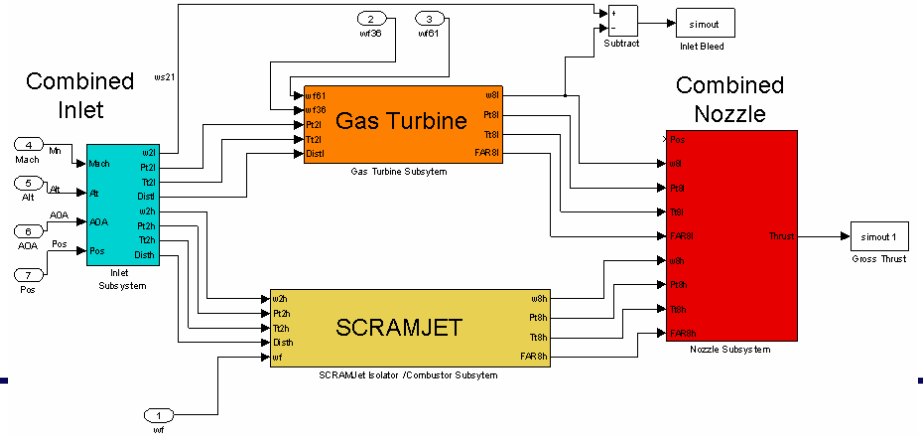
Propulsion System Broken Down into Four Sub-Systems