National Aeronautics and Space Administration

Hypersonic Propulsion Control

LAPIN in-the-loop Simulation

Daniel R. Vrnak

NASA Glenn Research Center at Lewis Field, Cleveland, Ohio

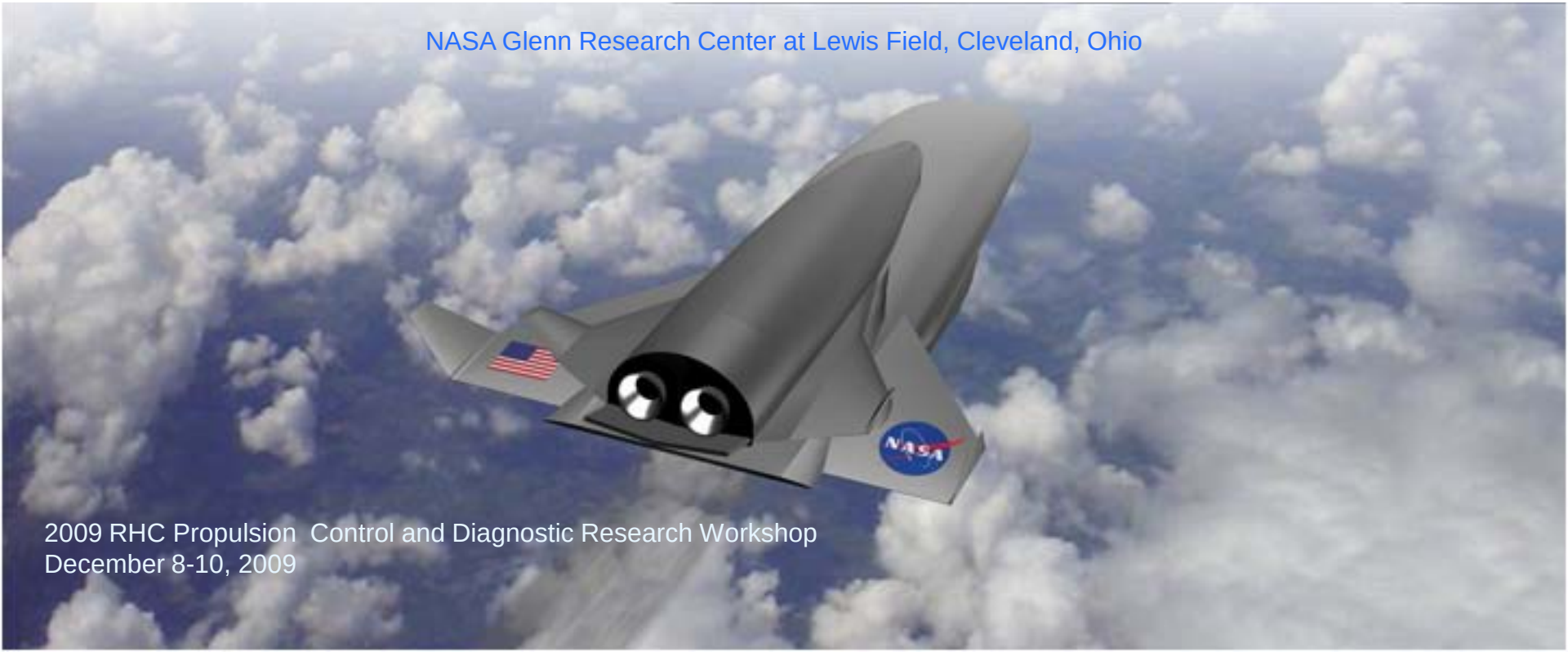

2009 RHC Propulsion Control and Diagnostic Research Workshop
December 8-10, 2009

GOALS

- To have the legacy code LAPIN interface with a Simulink model
  - Streamline control design activities
    - Build control design models
    - Verify controller designs
  - Enable Matlab data analysis tools for LAPIN simulation results
    - Facilitate Aero-Servo Elasticity study of inlet system including hydraulic actuator dynamics, seal friction, and aero-loads
    - Investigate couplings between flow and actuator dynamics
- To avoid major changes to the LAPIN source code
  - Published Legacy code
  - Complex code

Outline

- LAPIN Overview
- Methodologies to Interface LAPIN capability with MATLAB/Simulink capability
- LAPIN in-the-loop using MMF
  - Independent LAPIN flow-path
  - LAPIN interfaced with MMF
  - LAPIN and Simulink interactive through MMF
  - Task challenges
- Progress to date
- Conclusions

LAPIN Overview

- LArge Perturbation INlet Simulation Code
  - Originally developed for NASA under contract to Sverdrup Technology and delivered in 1984
  - Written in Fortran77
  - Has been ported to PCs and UNIX-based workstations
  - Does not have a graphical user interface
- LAPIN is a 1d CFD code for simulation of inlets
- Primarily intended for supersonic propulsion control applications

Candidate Interactive Methodologies

- Three methods judged too time-consuming
  - Rewrite LAPIN in Simulink blocks
  - Rewrite LAPIN in script MATLAB code
  - Push LAPIN Fortran code into S-Function block(s)
- Run LAPIN in parallel with MATLAB/Simulink
  - Use Memory Mapped File (MMF) communication technique
  - Dual Thread process
  - More information on the MMF API available at:

    http://msdn.microsoft.com/

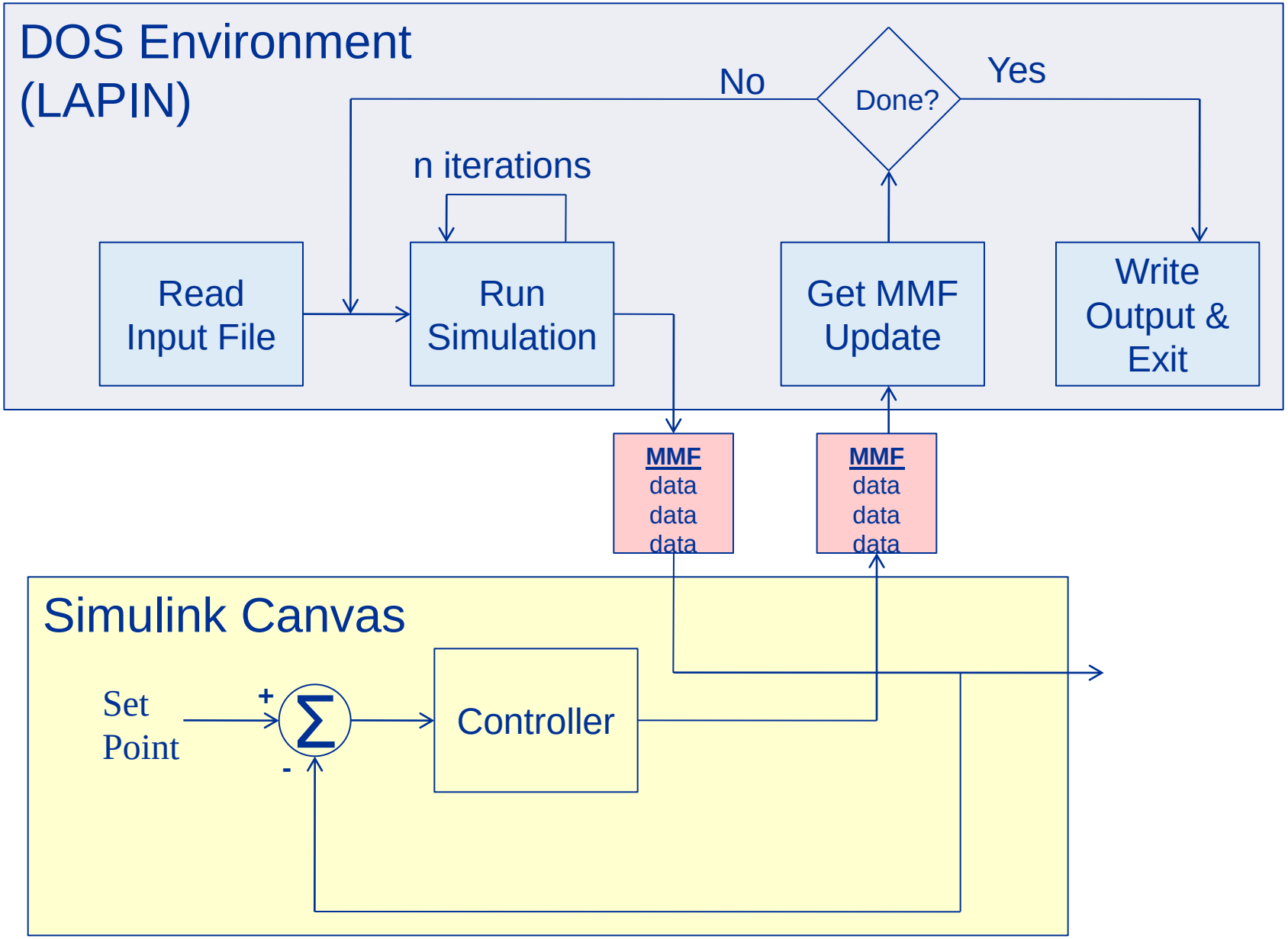
DOS Environment
(LAPIN)
No
Done?
Yes
n iterations
Read
Input File
Run
Simulation
Get MMF
Update
Write
Output &
Exit
MMF
data
data
data
MMF
data
data
data
Simulink Canvas
Set
Point
+
-
Controller

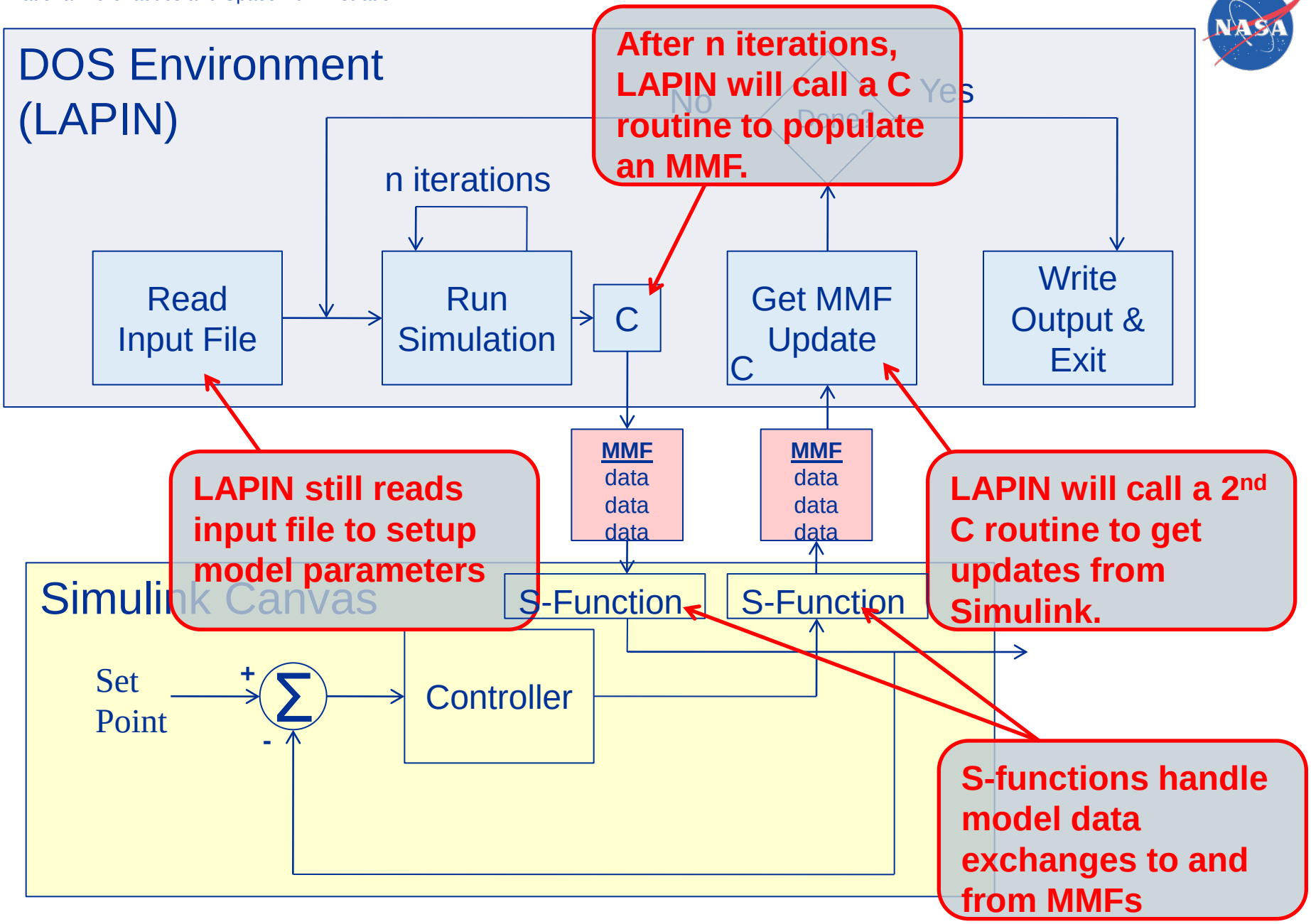
DOS Environment
(LAPIN)
After n iterations, LAPIN will call a C routine to populate an MMF.
No
Done?
Yes
n iterations
Read Input File
Run Simulation
C
Get MMF Update
C
Write Output & Exit
MMF
data
data
data
MMF
data
data
data
LAPIN still reads input file to setup model parameters
LAPIN will call a 2nd C routine to get updates from Simulink.
Simulink Canvas
S-Function
S-Function
Set Point
+
-
Σ
Controller
S-functions handle model data exchanges to and from MMFs

PROGRESS TO DATE

- Technique has been demonstrated with LAPIN simulating the CCE Testbed
- Have verified that Simulink is able to vary LAPIN while running and receiving data (pressure, mass flow rate, temperature,…)
  - Variable Inlet Center Body position
  - Variable Cowl position
  - Variable Bypass mass extraction
- LAPIN data on pressure, mass, etc is taken at selected grid locations in the throat, bundled into a vector of 550 double precision values for transfer to Simulink via MMF

Large-scale Inlet – Mode Transition

- Inlet geometry modeled by LAPIN
- Simulink controlled actuators: ramp, splitter, bypass

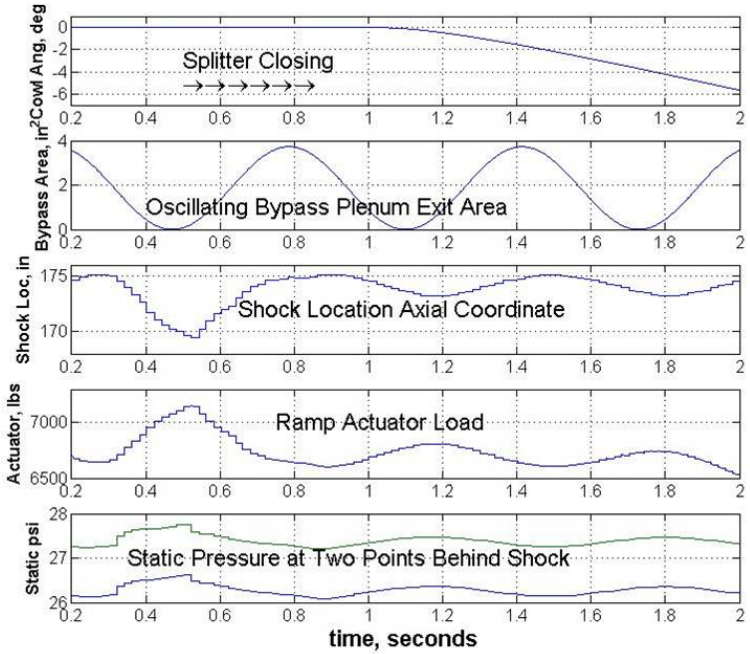

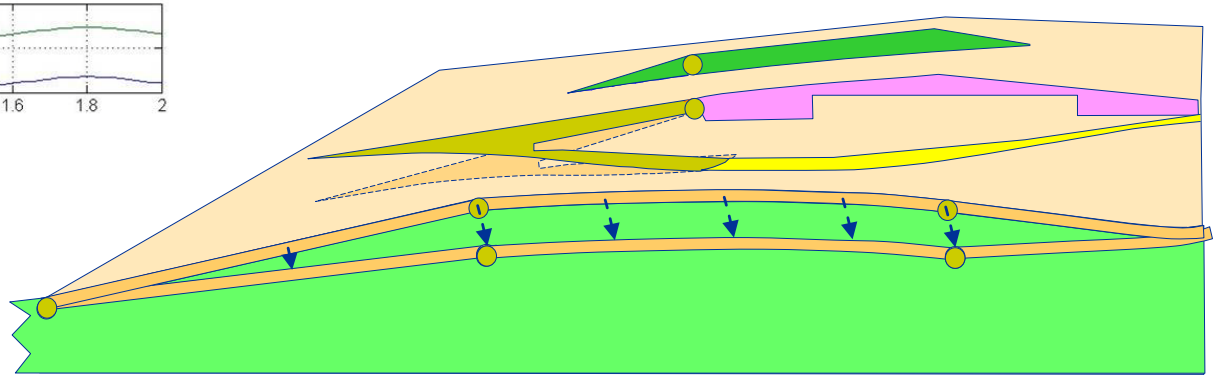

Conclusions

- LAPIN, GRC legacy dynamic inlet code, has successfully run independently and in parallel with MATLAB/Simulink
- Parallel threads are time synchronized and they exchange data
- Both independent threads are responsive to input stream of data from other thread
- Technique has been demonstrated with LAPIN simulating the CCE Testbed
- This technique can be reproduced to accommodate:
  - Multiple instances of LAPIN
  - Other complex .f executables