Hypersonic Propulsion Control

Inlet Aero-Servo Dynamics Model

Dzu K. Le/Propulsion and Control Systems Branch (DSS0)

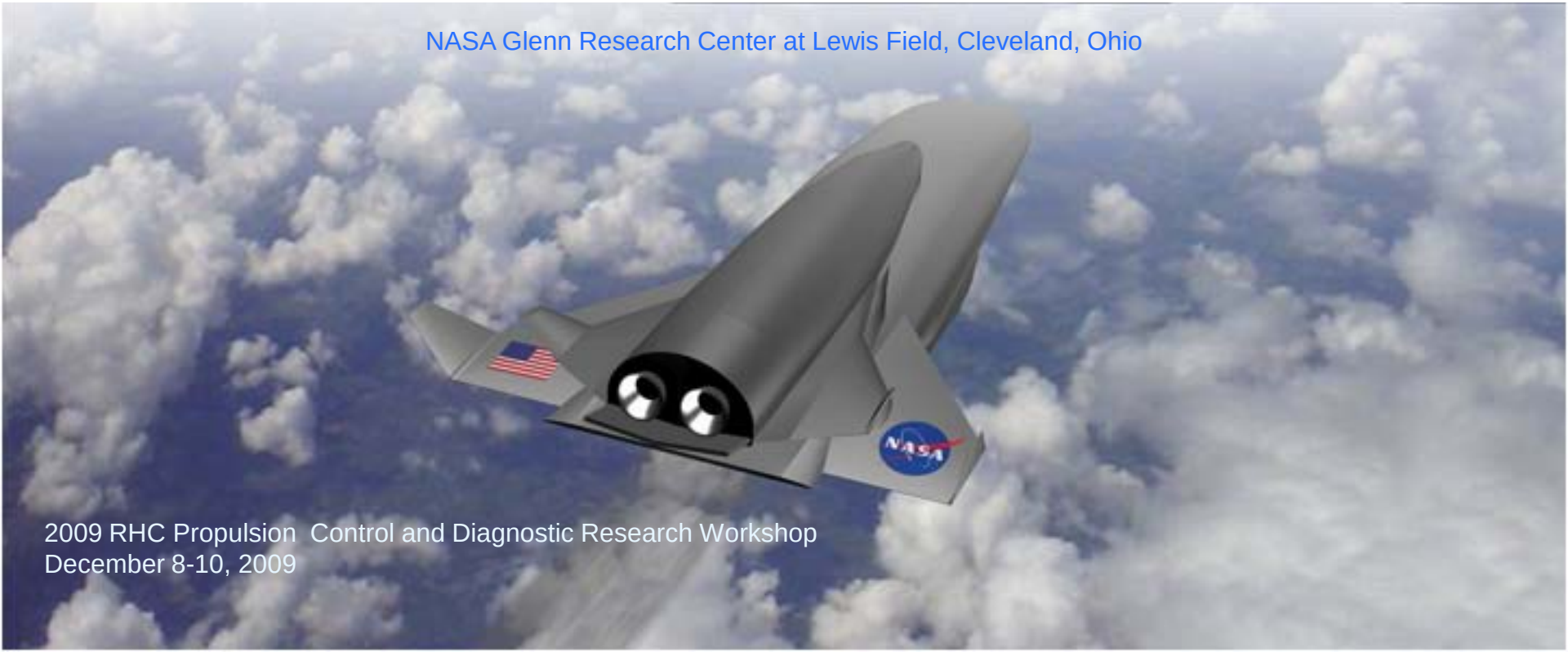

2009 RHC Propulsion Control and Diagnostic Research Workshop
December 8-10, 2009

GOALS

- Develop control model of dynamic interactions between the inlet air flows and variable-geometry actuators for mode-transition control research.
- Predict aero-servo control interactions below 200Hz.
- Support inlet-mode transition control research of the CCE (Combined-Cycles Engine) Testbed large-scale wind tunnel model inlet system to study mode transition.
- Provide a building block for modeling the *Vision Hypersonic Propulsion System* for control system design and mode-transition developments

Outline

- Aspects of the Aero-Servo Dynamics Model.
- Modeling Scope
- Example Simulink Model of Aero-Servo Dynamics
- Example Results
- Accomplishments
- Further Works

Modeled Aero-Servo Dynamics Aspects

(Fundamental freq. ~ 47 Hz)

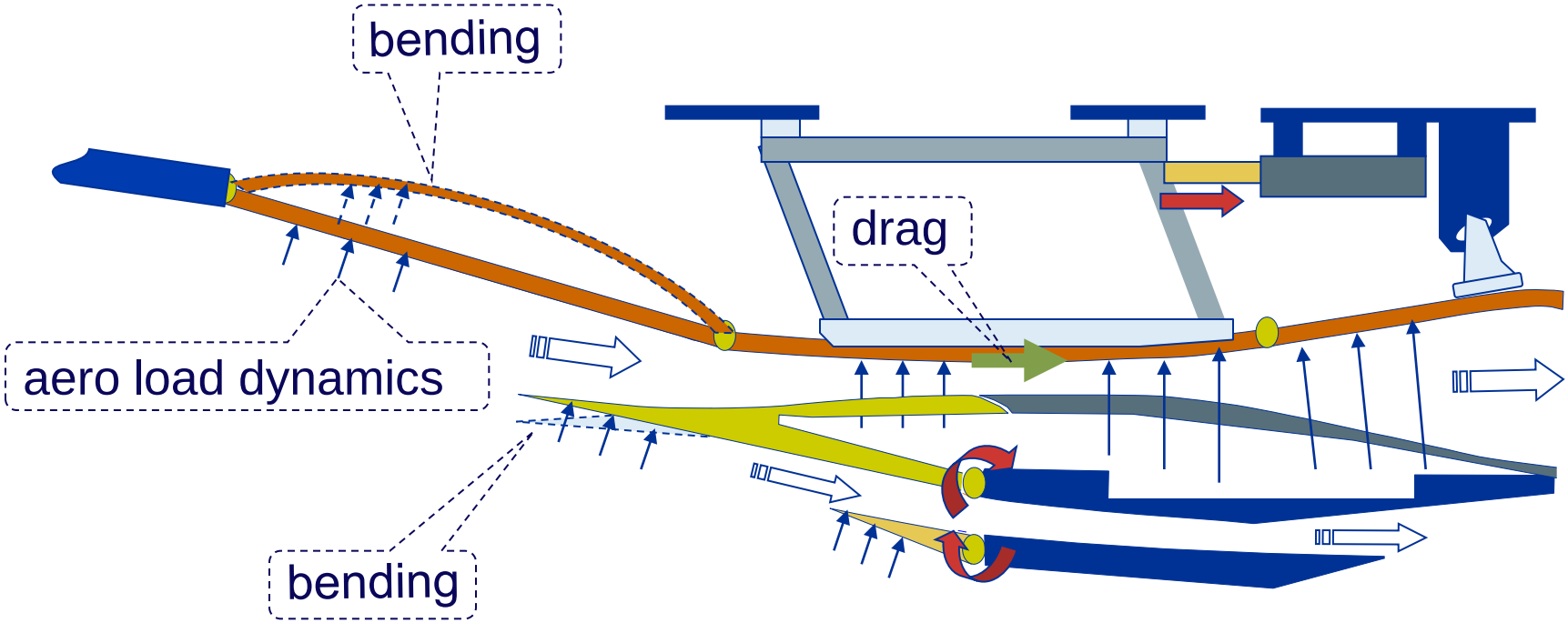

(Fundamental freq. ~ 62 Hz)

Modeling Scope

- Servo mechanical control components.
- Detailed actuators nonlinear dynamics
- Calculations of aero loads on moving parts
  - using CFD predicted un-start loads
  - using 2D/3D-CFD predicted static pressures distribution
  - using 1-D CFD dynamics model in the loop (e.g., LAPIN)
- Distributed seal-frictions
- Variable-Geometry components EOM
- Flexible dynamics effects

Example Simulink Model of Aero-Servo Dynamics

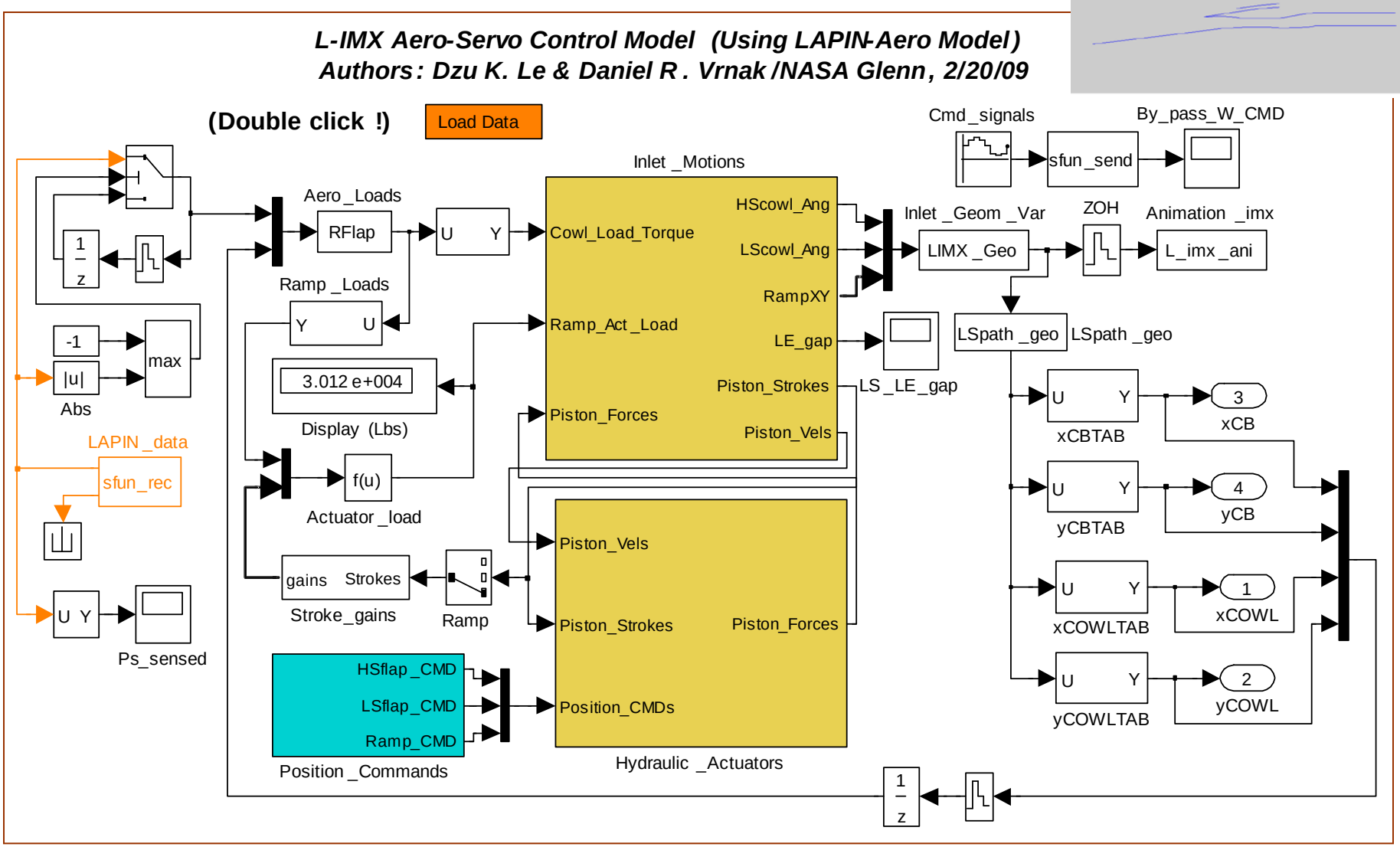

Example Simulation Result

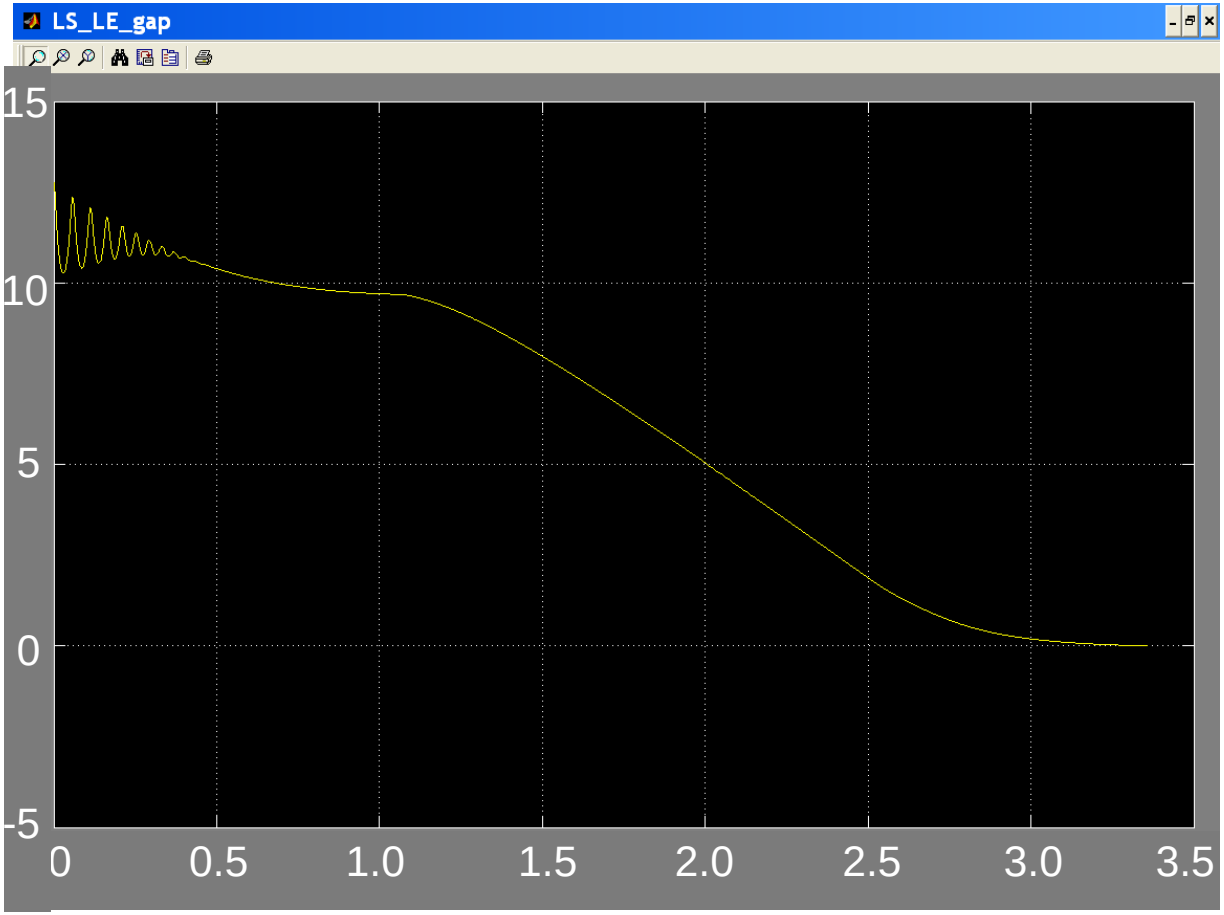

Figure 1: Gap between Splitter and Ramp, transition begins at t=1sec
(X-axis: seconds; Y-axis: inches)

Example Simulation Result

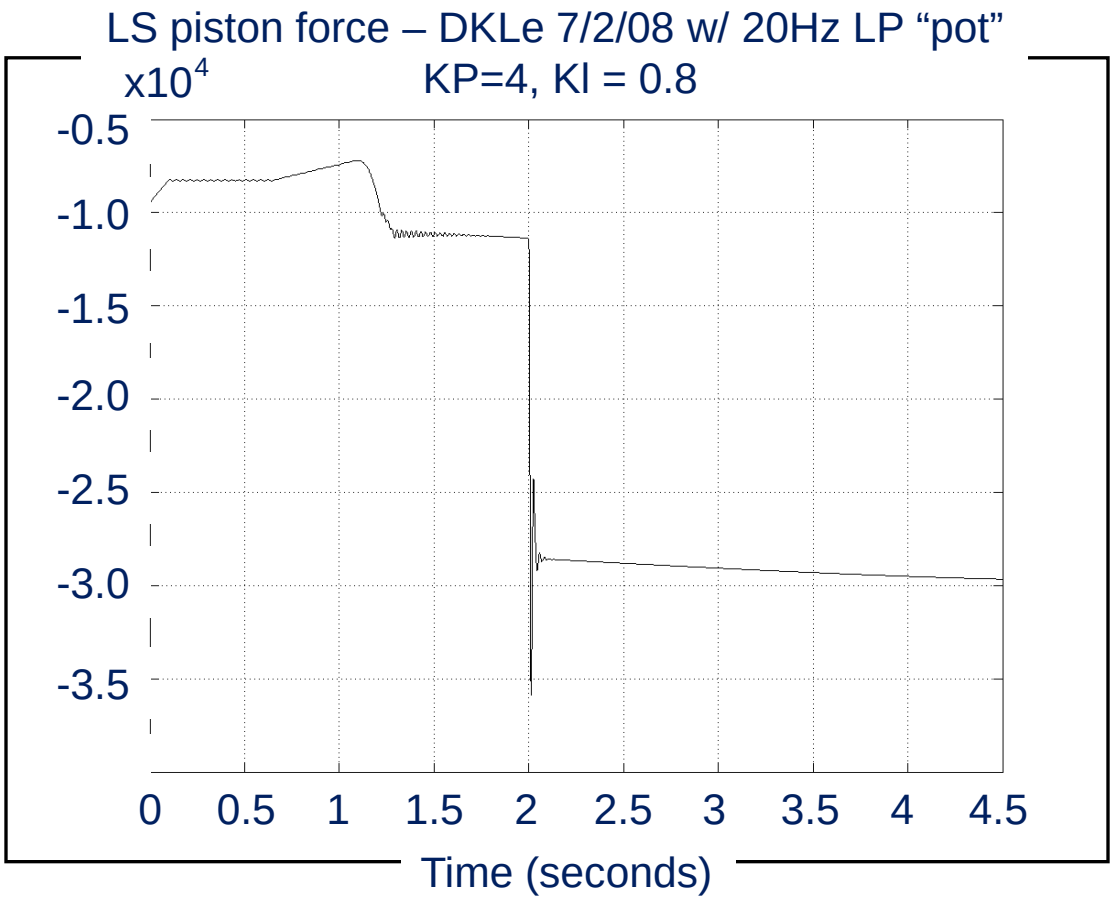

Figure 2: Shock (~ 25Klbf) on splitter actuator at simulated inlet unstart(t=2sec)

Accomplishments

- Completed a preliminary Simulink model of aero-servo dynamics.
- Used the model to validate the CCE Testbed servo-mechanical control performance and actuators load
- Provided insights to potential shortfall in actuator design
- The model is applicable to future work in mode-transition control developments.

Further work

- Model update for latest mechanical design changes in the CCE Testbed.
- Model inlet flexibility effects
- Update predictions on CCE Testbed mechanical control performance
- Support on-going developments of mode-transition propulsion-system control