National Aeronautics and Space Administration

Hypersonic Propulsion Control

Overview

Thomas J. Stueber

NASA Glenn Research Center at Lewis Field, Cleveland, Ohio

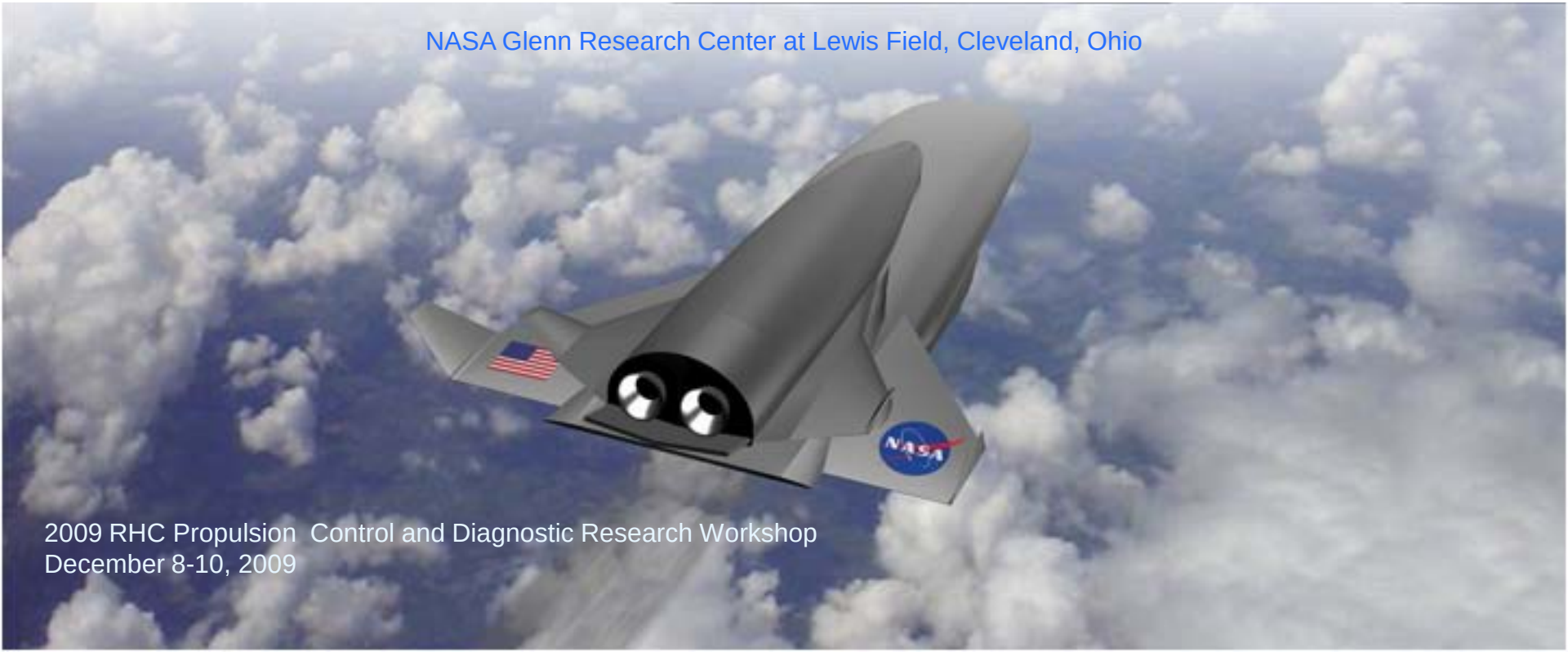

2009 RHC Propulsion Control and Diagnostic Research Workshop
December 8-10, 2009

Outline for Talks

- Hardware Testing
- Aeroservoelastic Modeling
- LAPIN in-the-loop
- Propulsion System Simulations

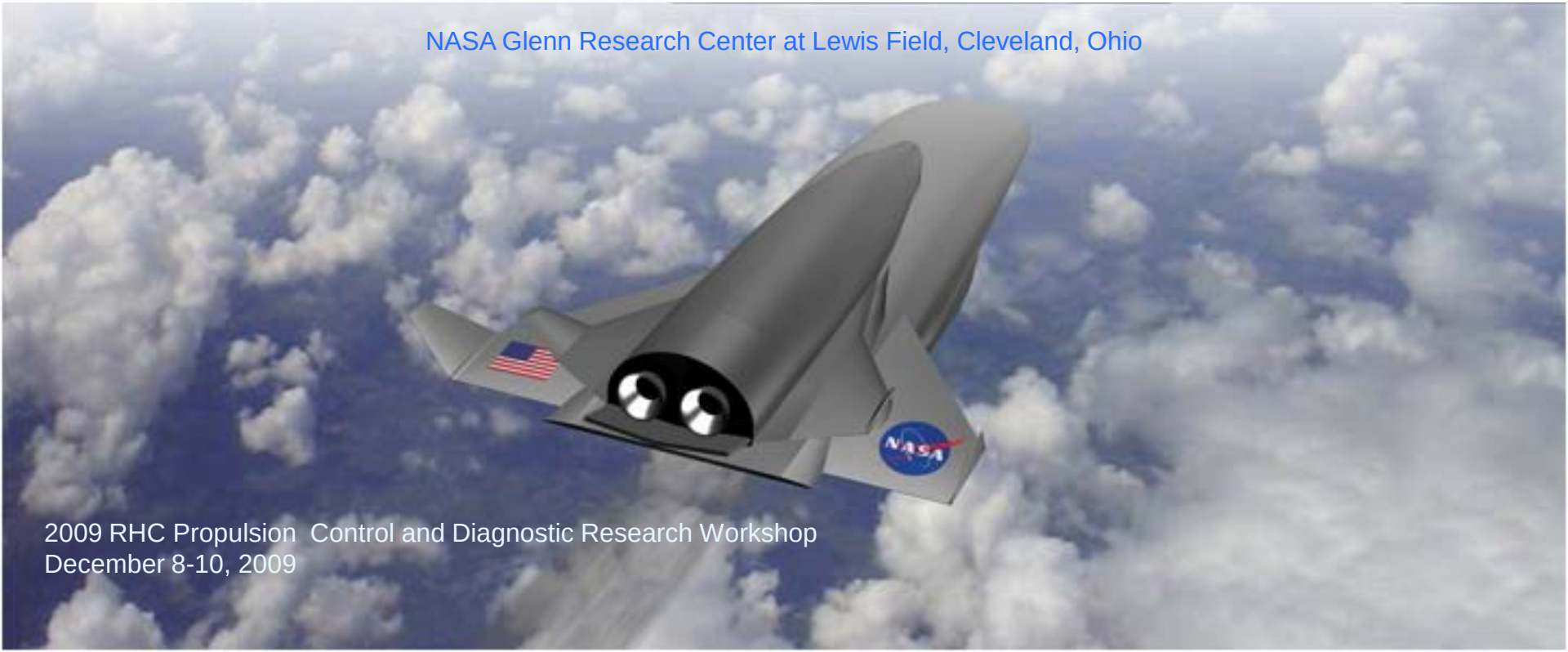

Control Activity in Support of NASA TBCC Research

Thomas J. Stueber/RHC

Randy Thomas/RHC
Daniel E. Paxson/RHC
Daniel R. Vrnak/DSS
Dzu K. Le/DSS
John J. Pouch/RHA
Binh V. Nguyen/RHD
Joseph A. Downey/RHD
Jennifer M. Nappier/RHD
Peter J. Ouzts/RTE

Jeffrey P. Hand
Boston College

Frederick L. Doering
Case Western Reserve University

Zaynah A. Ali
Tuskegee University

SPIRITECH
Advanced Products, Inc.

Glenn Research Center at Lewis Field
Hypersonic Project,
Guidance Navigation & Control Team

Purposes

1. To Present the Hypersonic GN&C: Propulsion System Control Team Long Term Plans.
2. To Present the Accomplishments or Progress of Hypersonic GN&C team.

Memory Mapped File

Large Perturbation INlet Simulation Code

NASA Research Announcement

Combined Cycle Engine, Large Scale, Inlet for Mode Transition Studies

entification Experi

Y 2010

- to run LAPIN and MA in the Loop.
- NF y.
- In-House Simulation Tool Development.

(MATLAB® and Simulink® are registered trademarks of the MathWorks, Inc.)

Purposes

1. To Present the Hypersonic GN&C: Propulsion System Control Team Long Term Plans.
2. To Present the Accomplishments or Progress of Hypersonic GN&C team.

- System Identification Experiment Preparations for the CCE Testbed. CY 2010
- MMF Implementation to run LAPIN and MATLAB/Simulink in Concert—LAPIN in the Loop.
- NRA supporting Control Design activity.
- In-House Simulation Tool Development.

(MATLAB® and Simulink® are registered trademarks of the MathWorks, Inc.)

Control Goals

Design Controllers for a TBCC Hypersonic Vehicle Propulsion System that include the following elements:

- Inlet System
- Turbine Engine
- Dual-Mode Combustor
- Nozzle System

TBCC Concept

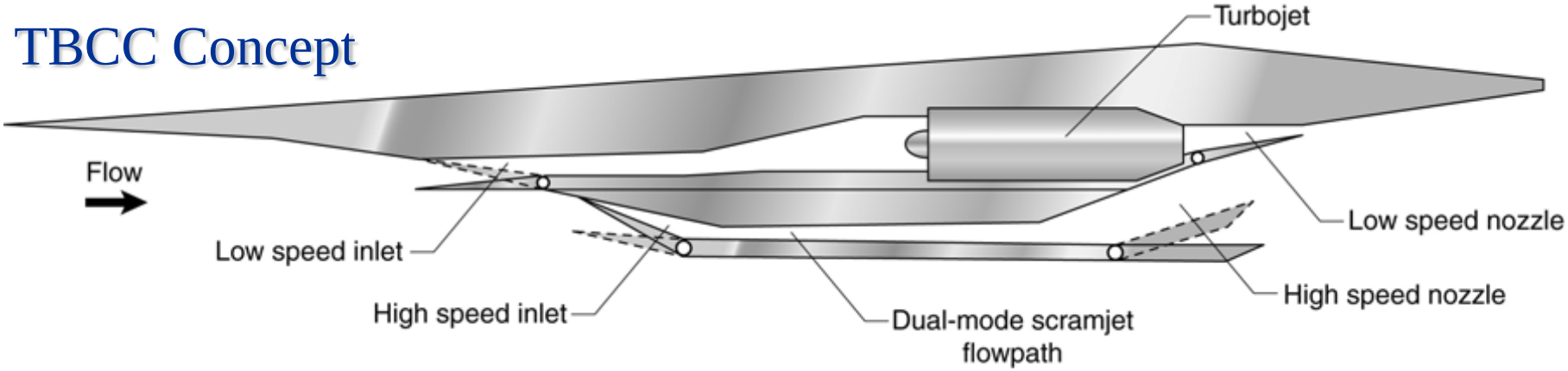

Albertson, C.W., Emami, S., and Trexler, C.A., "Mach 4 Test Results of a Dual-Flowpath, Turbine Based Combined Cycle Inlet," AIAA 2006-8138.

Control Goals

Design Controllers for a TBCC Hypersonic Vehicle Propulsion System that include the following elements:

- Inlet System
- Turbine Engine
- Dual-Mode Combustor
- Nozzle System

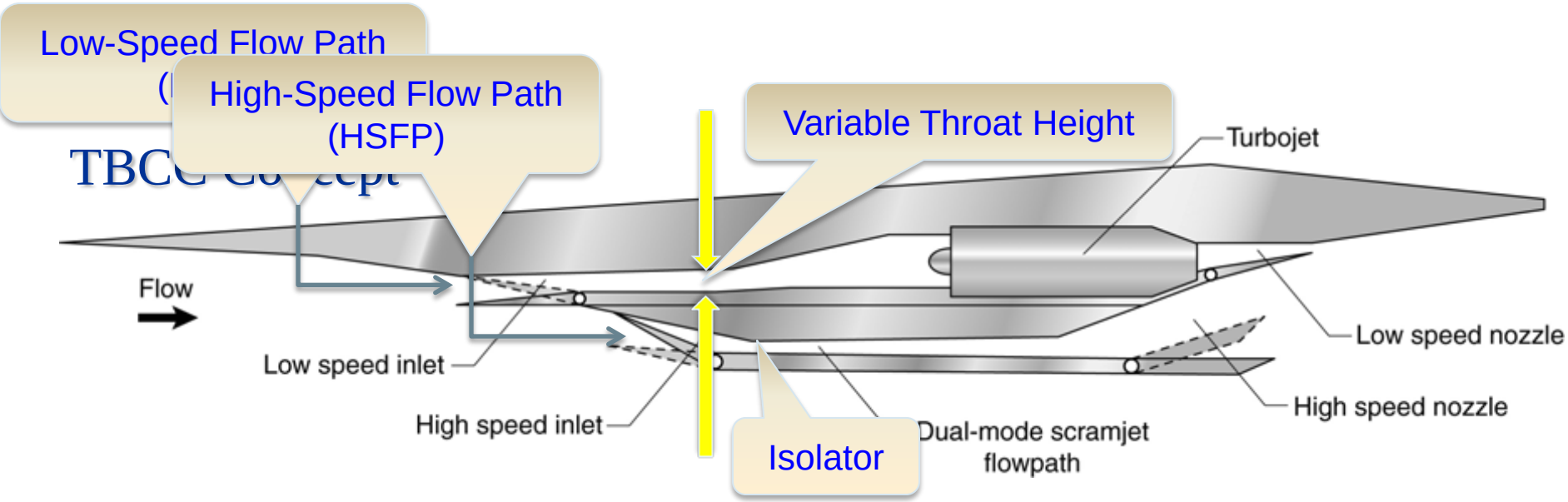

Albertson, C.W., Emami, S., and Trexler, C.A., "Mach 4 Test Results of a Dual-Flowpath, Turbine Based Combined Cycle Inlet," AIAA 2006-8138.

Four Essential Elements for Controller Development

- A model of the System to be controlled
  - Control Design models
  - Control Truth models
- A specific objective for the system
- A set of admissible controllers
- A means of measuring the controller performance
  - Test control robustness
  - Test control effectiveness

Team Goals

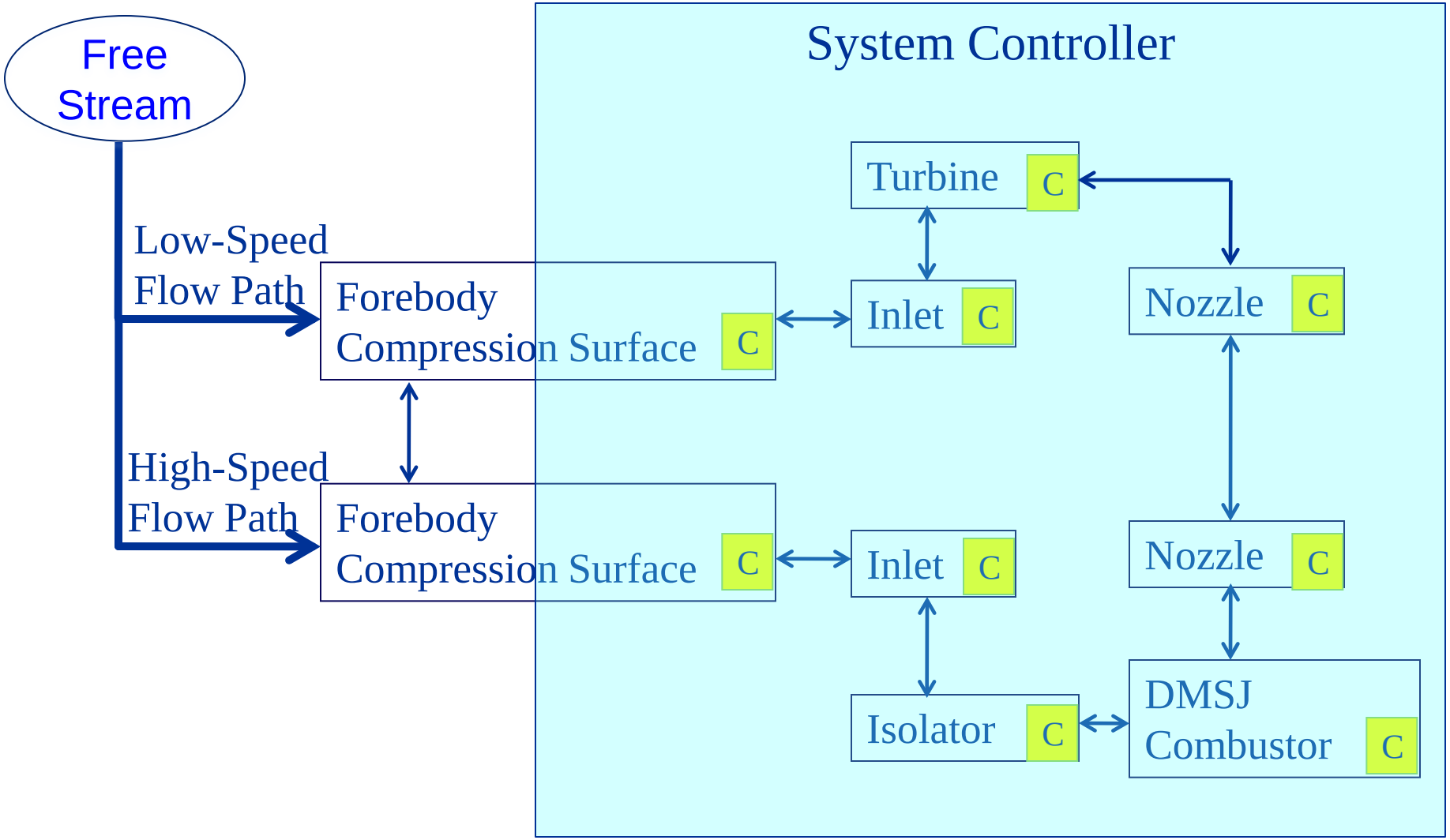

MATLAB/Simulink

Team Goals

Forebody Compression Surface ⟷ Inlet C

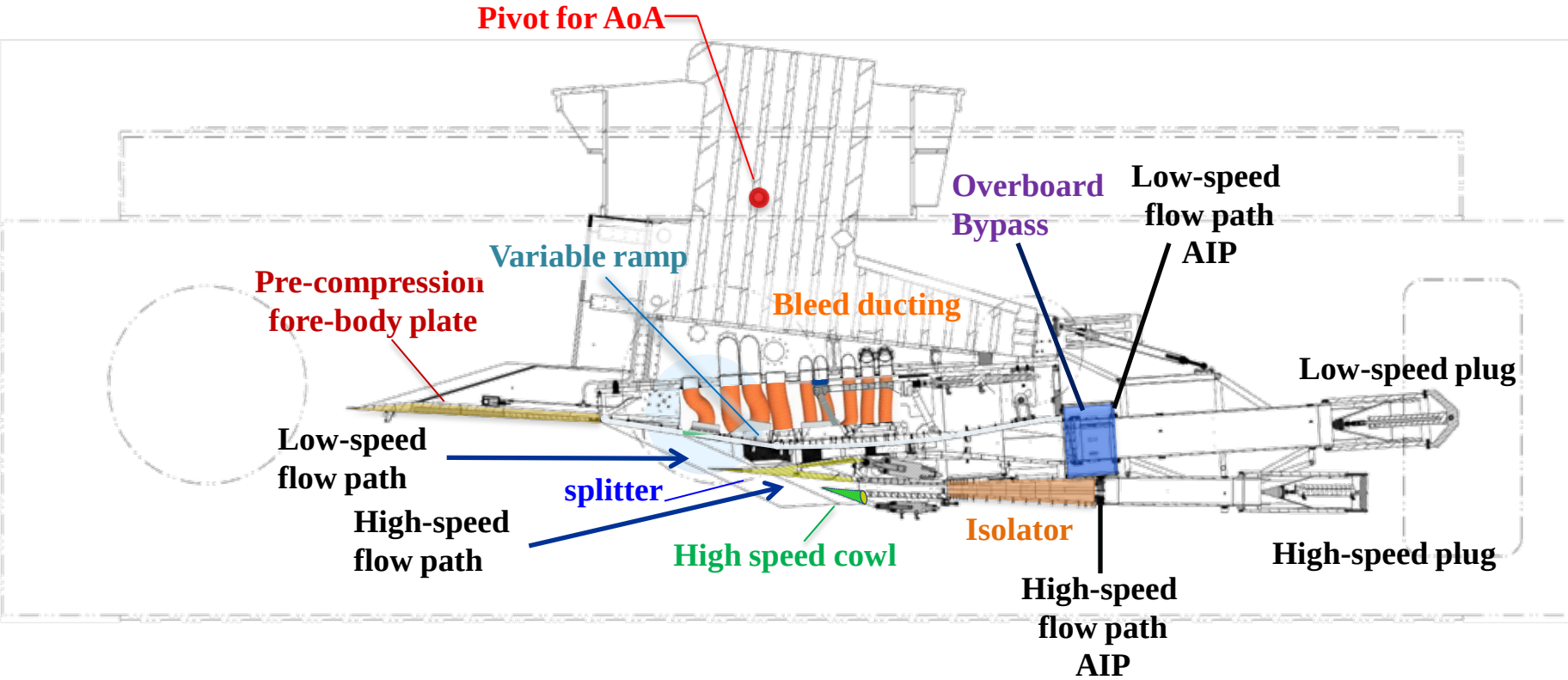

Team Goals

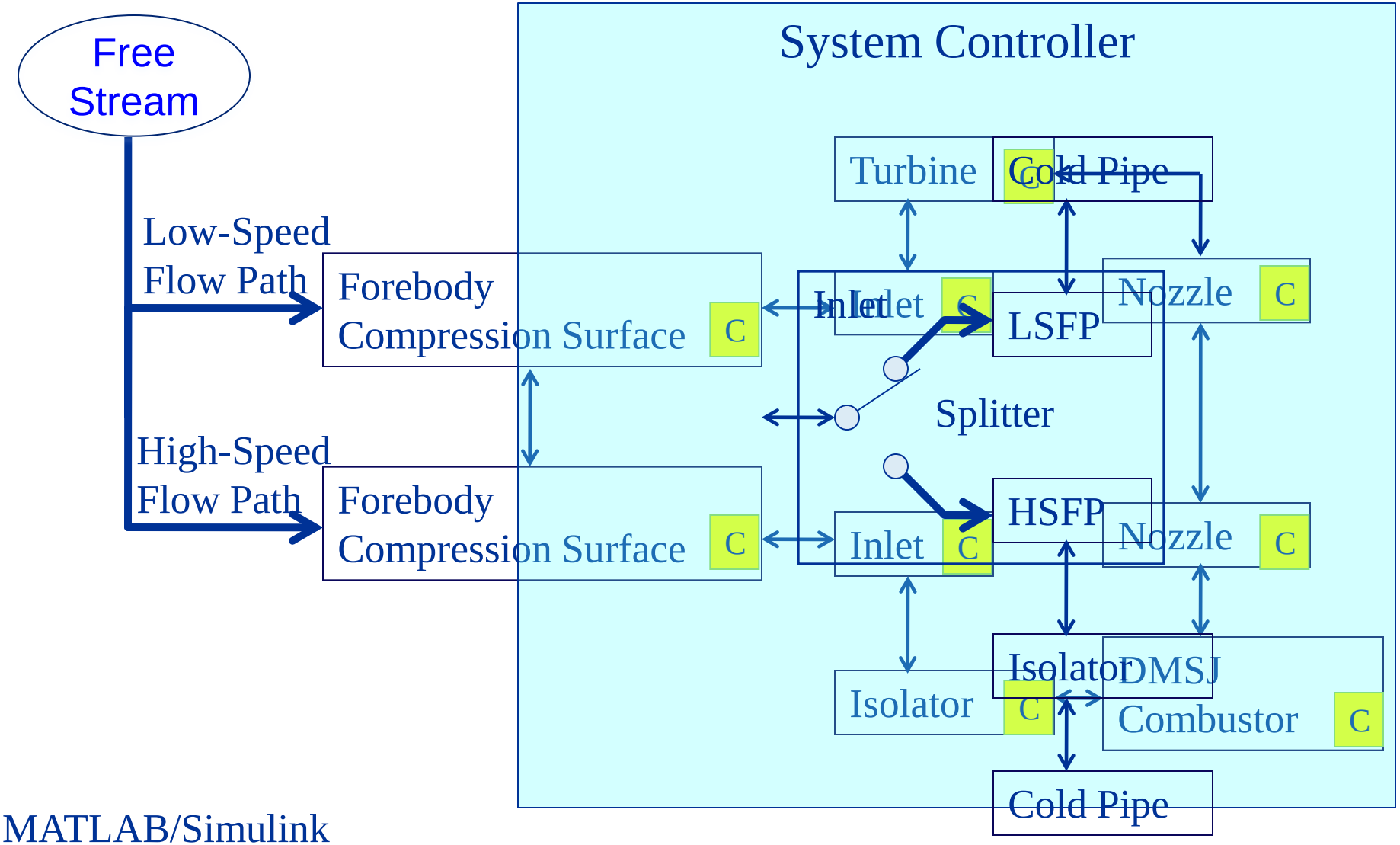

MATLAB/Simulink

Team Goals

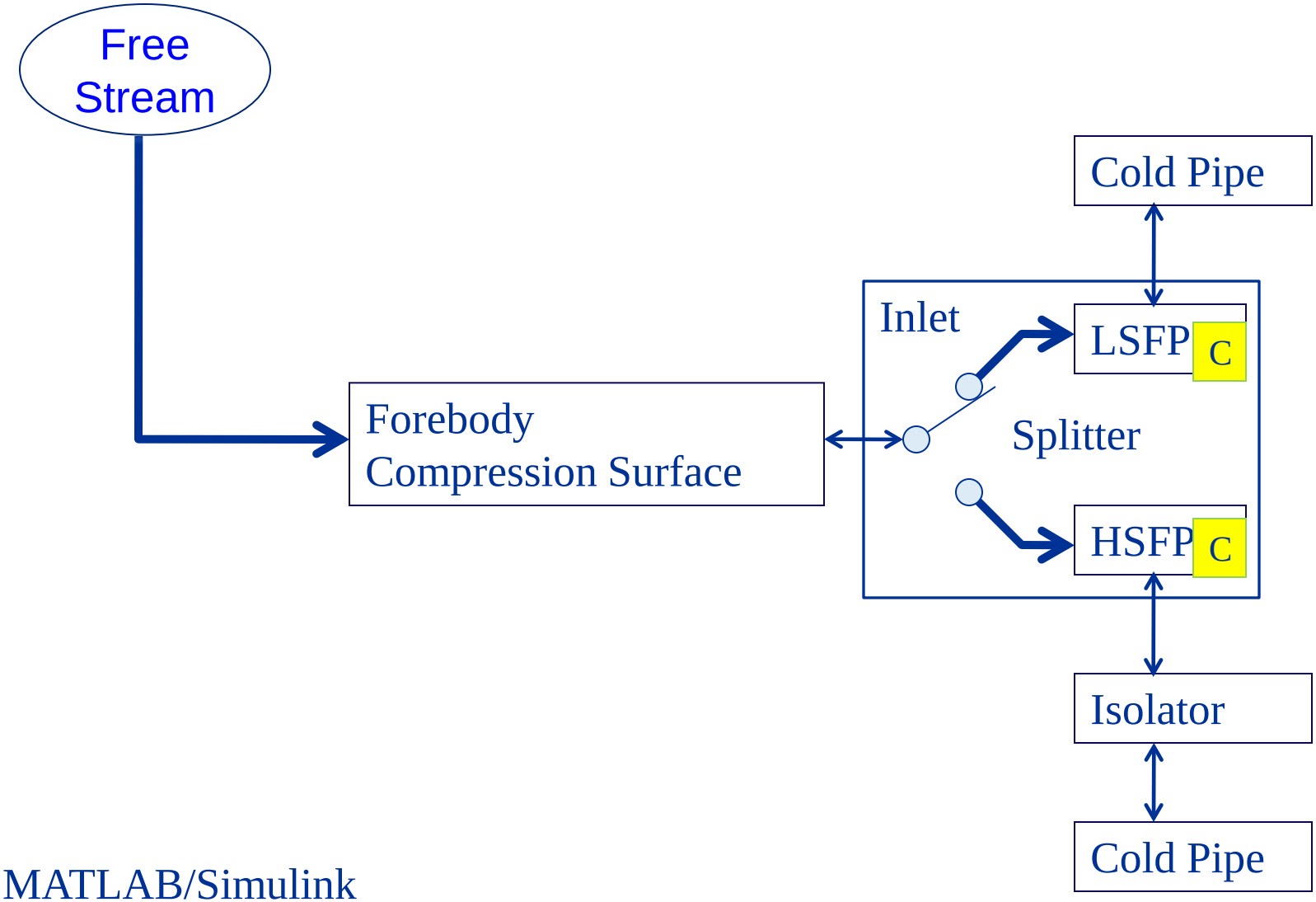

MATLAB/Simulink

Available Simulations

Command Shell Impractical

- LAPIN (*Large Perturbation Inlet Model)*
- CFD (*NPARC/WINDUS)*

Multiple Parallel Paths Developing Simulations

- SPIRITECH NRA
- LAPIN in the Loop
- Interactive Simulation
- Aeroservo Simulation

} Tools

- System Identification Experiment

} Truth Model CDM