Distributed Engine Control

SiC High Temperature Electronics: Concepts and Development Timeline

Mike Krasowski,
Optical instrumentation and NDE Branch

Glenn Beheim,
Sensors and Electronics Branch

NASA Glenn Research Center

2009 Propulsion Controls and Diagnostics Workshop
December 8-10, 2009

Concepts for Silicon Carbide Electronics: Present Capabilities and Near Term Technologies

Michael Krasowski
Mobile And Remote Sensing Lab
Optical Instrumentation and NDE Branch
NASA Glenn research Center

michael.j.krasowski@nasa.gov
216 433-3739

Concepts for Silicon Carbide Electronics: Present Capabilities and Near Term Technologies

Demonstration of Record Temperature Range (-125 °C to +600 °C) SiC JFET Based Transistor Integrated Circuits

NAND Gate Test Waveforms

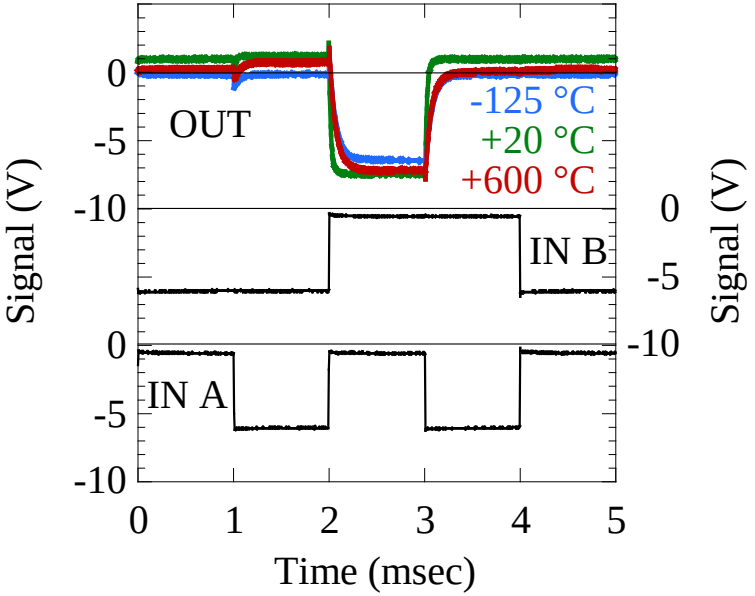

NOR Gate Test Waveforms

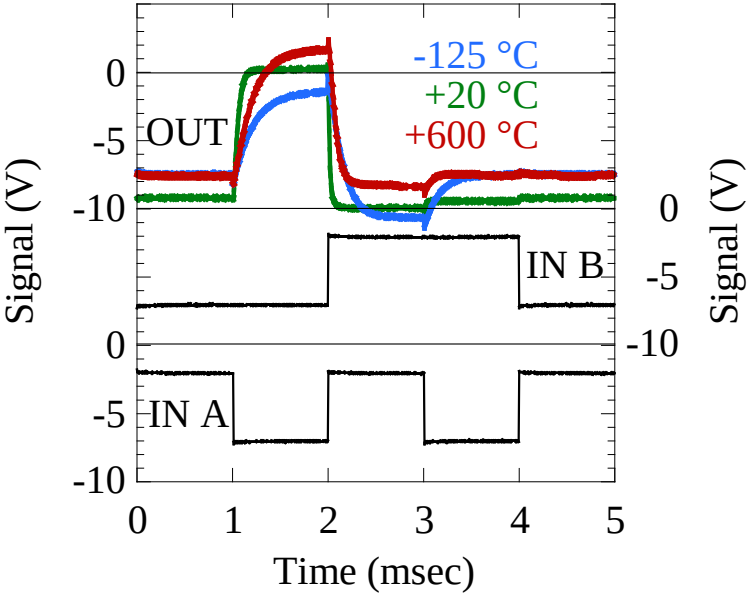

Concepts for Silicon Carbide Electronics: Present Capabilities and Near Term Technologies

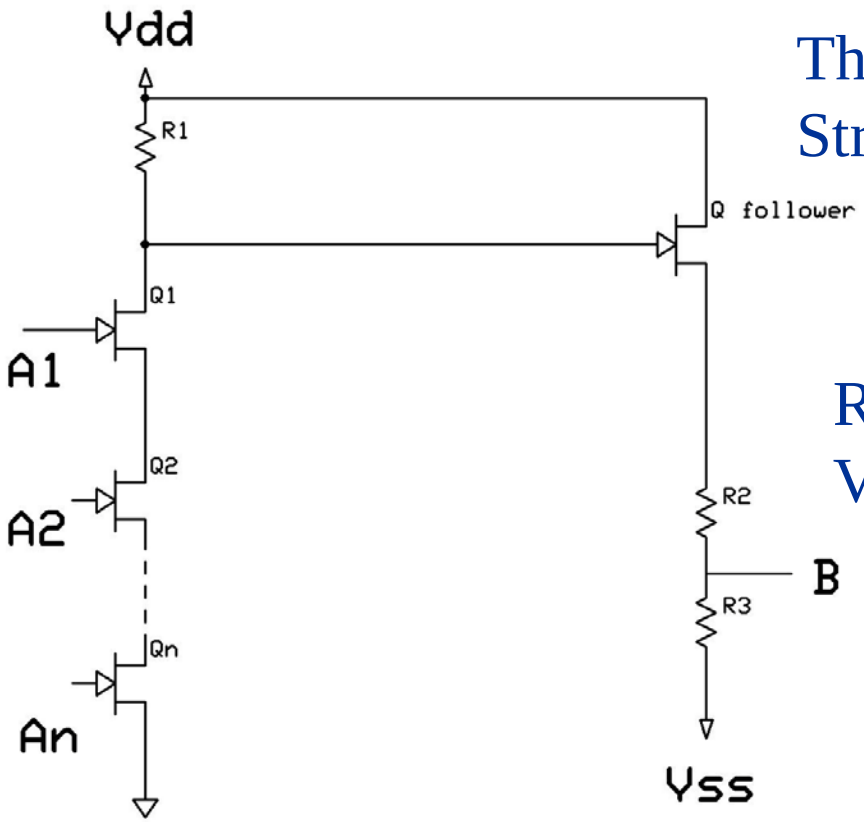

The Basic NAND (Not And) Structure (patent recently allowed)

N-Channel, Depletion Mode JFET Resistor/Transistor Logic: Resistor and transistor temperature Varience cancels over temperature range

Concepts for Silicon Carbide Electronics: Present Capabilities and Near Term Technologies

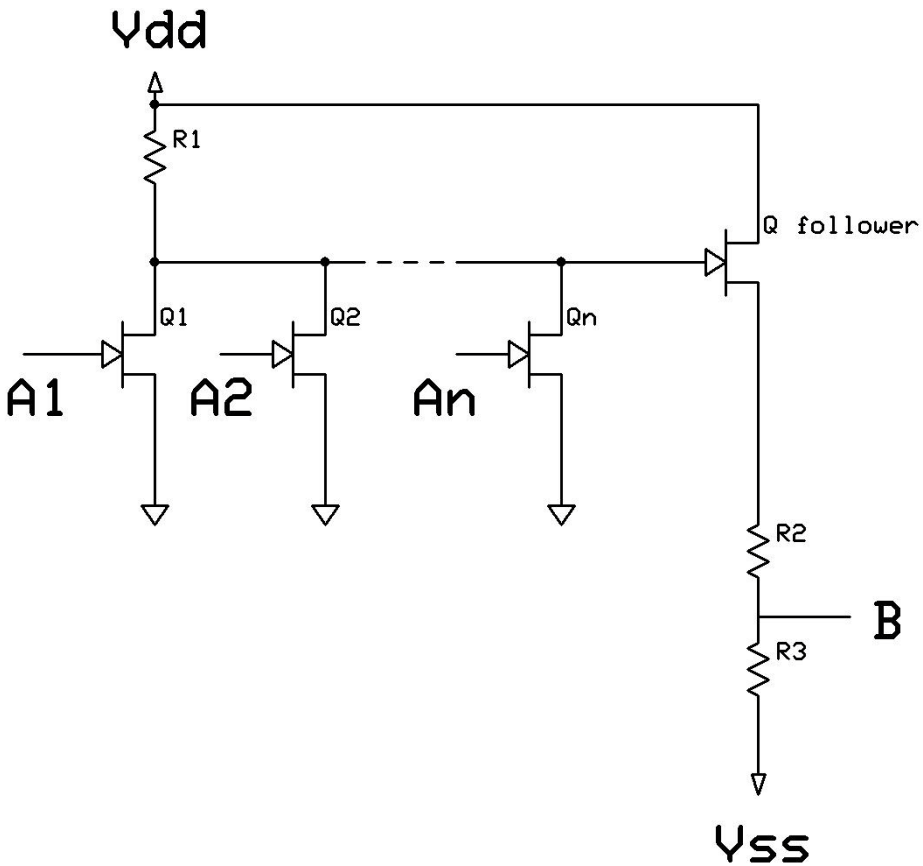

The Basic NOR (Not Or) Structure (patent recently allowed)

Concepts for Silicon Carbide Electronics: Present Capabilities and Near Term Technologies

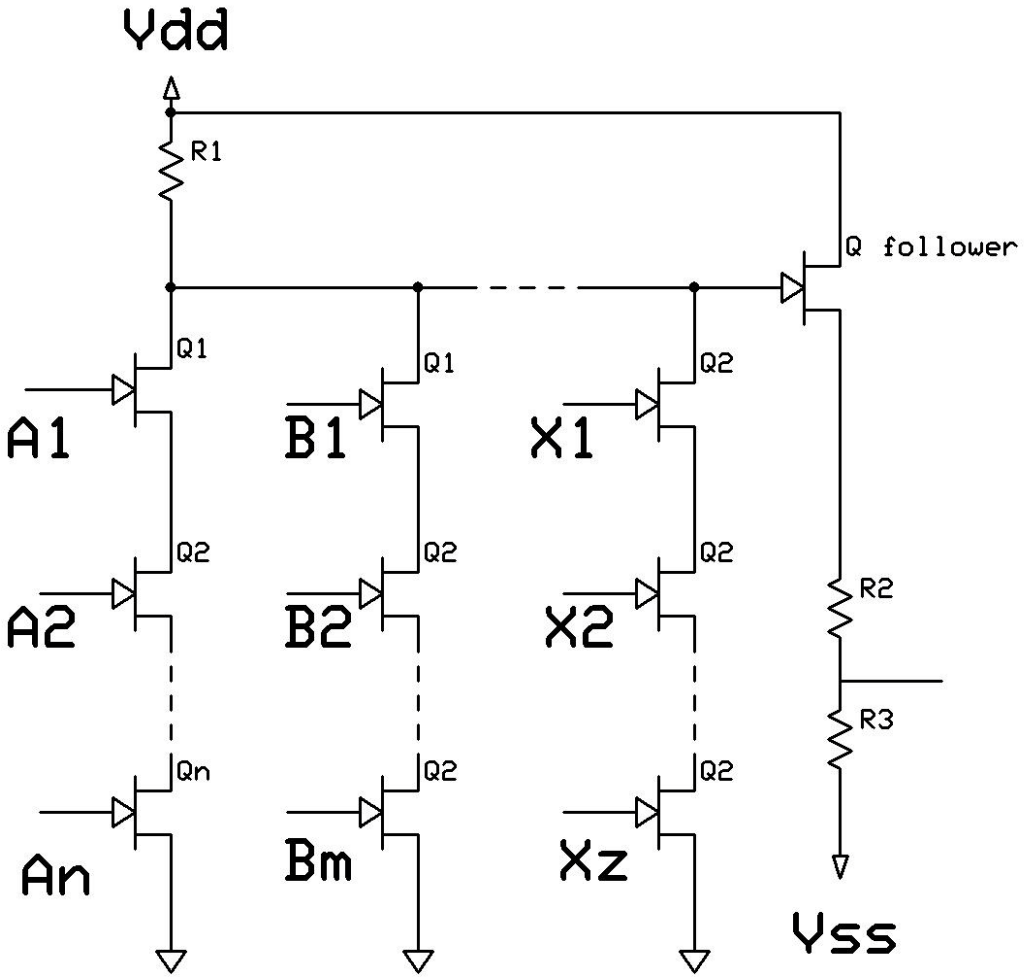

Complex (Sum of product) Structure (patent recently allowed)

Concepts for Silicon Carbide Electronics: Present Capabilities and Near Term Technologies

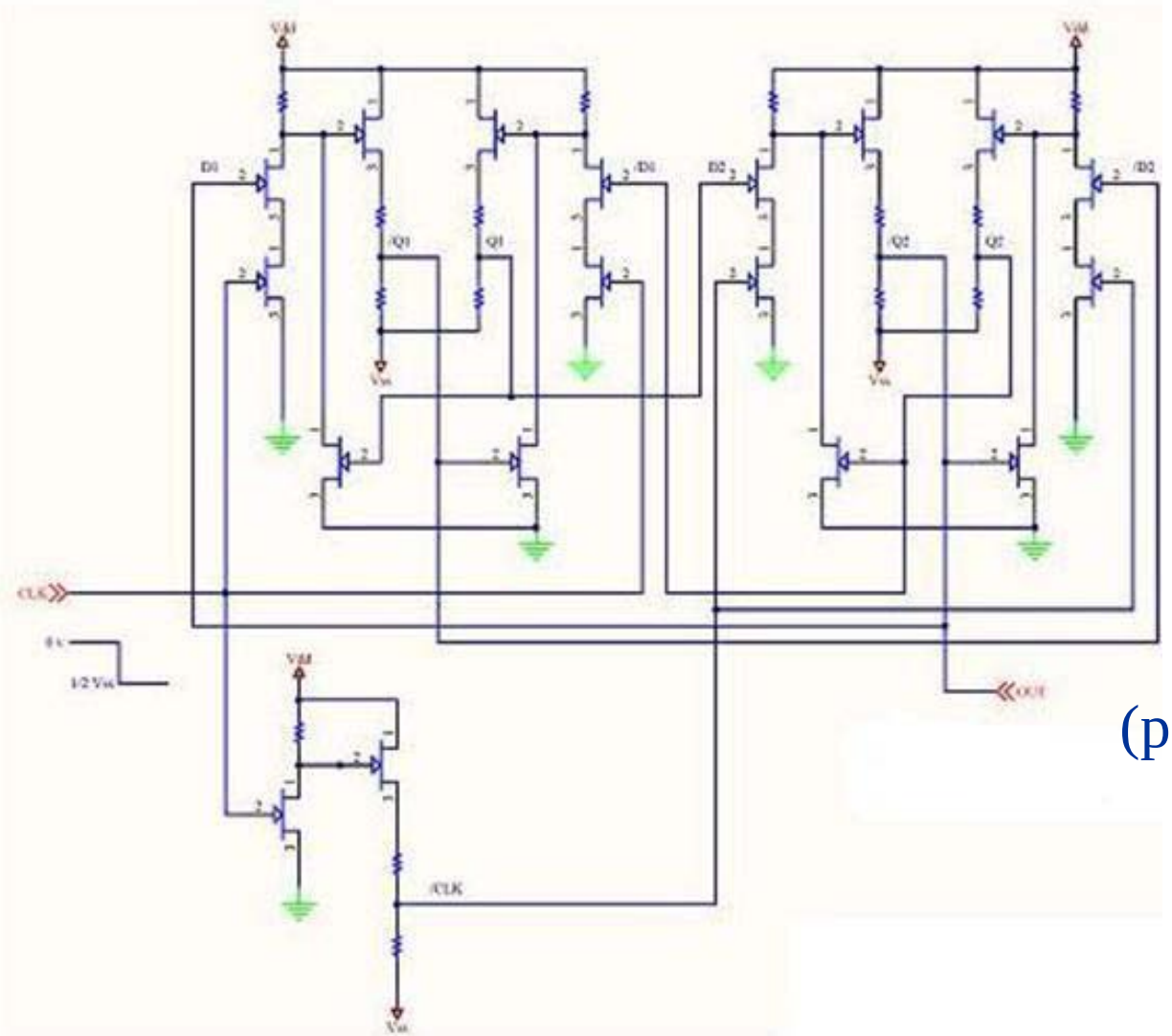

D Type Flip Flop Based Divide by 2 Circuit

(patent recently allowed)

Concepts for Silicon Carbide Electronics: Present Capabilities and Near Term Technologies

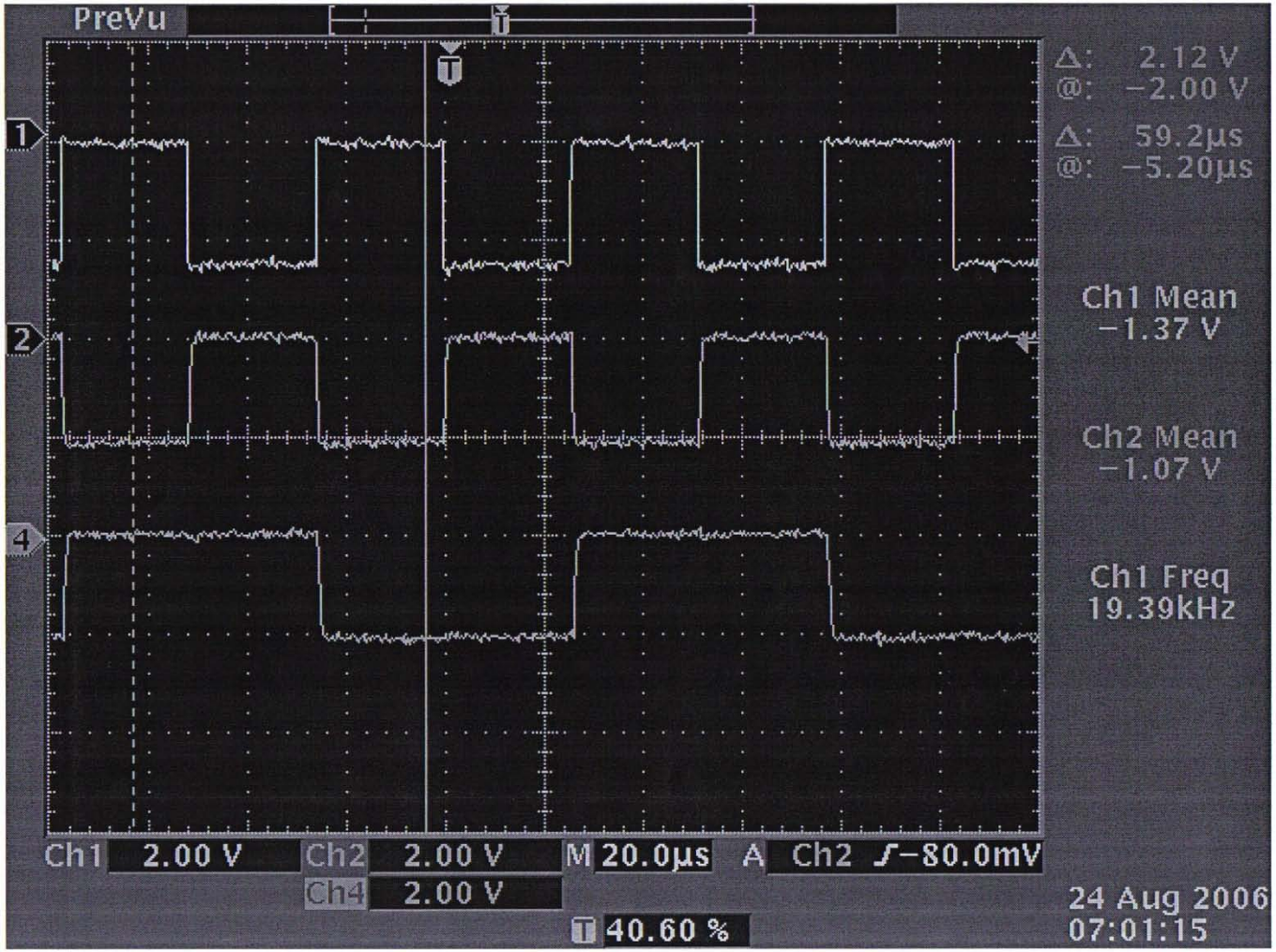

Input (top)
NOT Input (middle)
Output (bottom)
Of Divide by 2
Circuit using
Room
Temperature
Components in
SiC circuit
Topography

Concepts for Silicon Carbide Electronics:
Present Capabilities and Near Term Technologies

So what?

Concepts for Silicon Carbide Electronics: Present Capabilities and Near Term Technologies

Where we might be in 5 years:

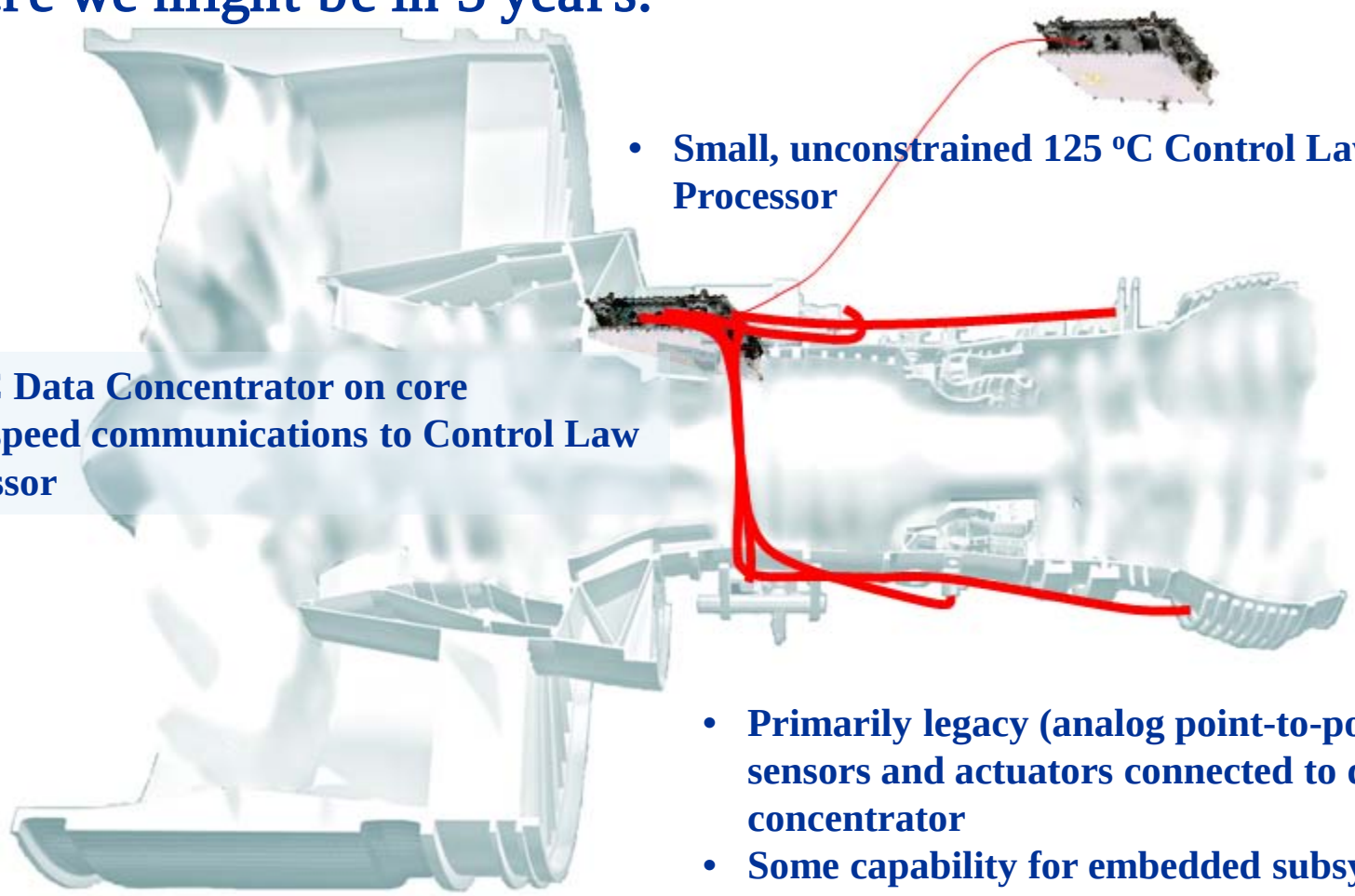

- Small, unconstrained 125 ºC Control Law Processor

- 225 ºC Data Concentrator on core
- High speed communications to Control Law Processor

- Primarily legacy (analog point-to-point) sensors and actuators connected to data concentrator
- Some capability for embedded subsystem control and wireless devices for Propulsion Health Monitoring (PHM)

(Thanks Dennis Culley)

Concepts for Silicon Carbide Electronics: Present Capabilities and Near Term Technologies

Where we might be in 10 years:

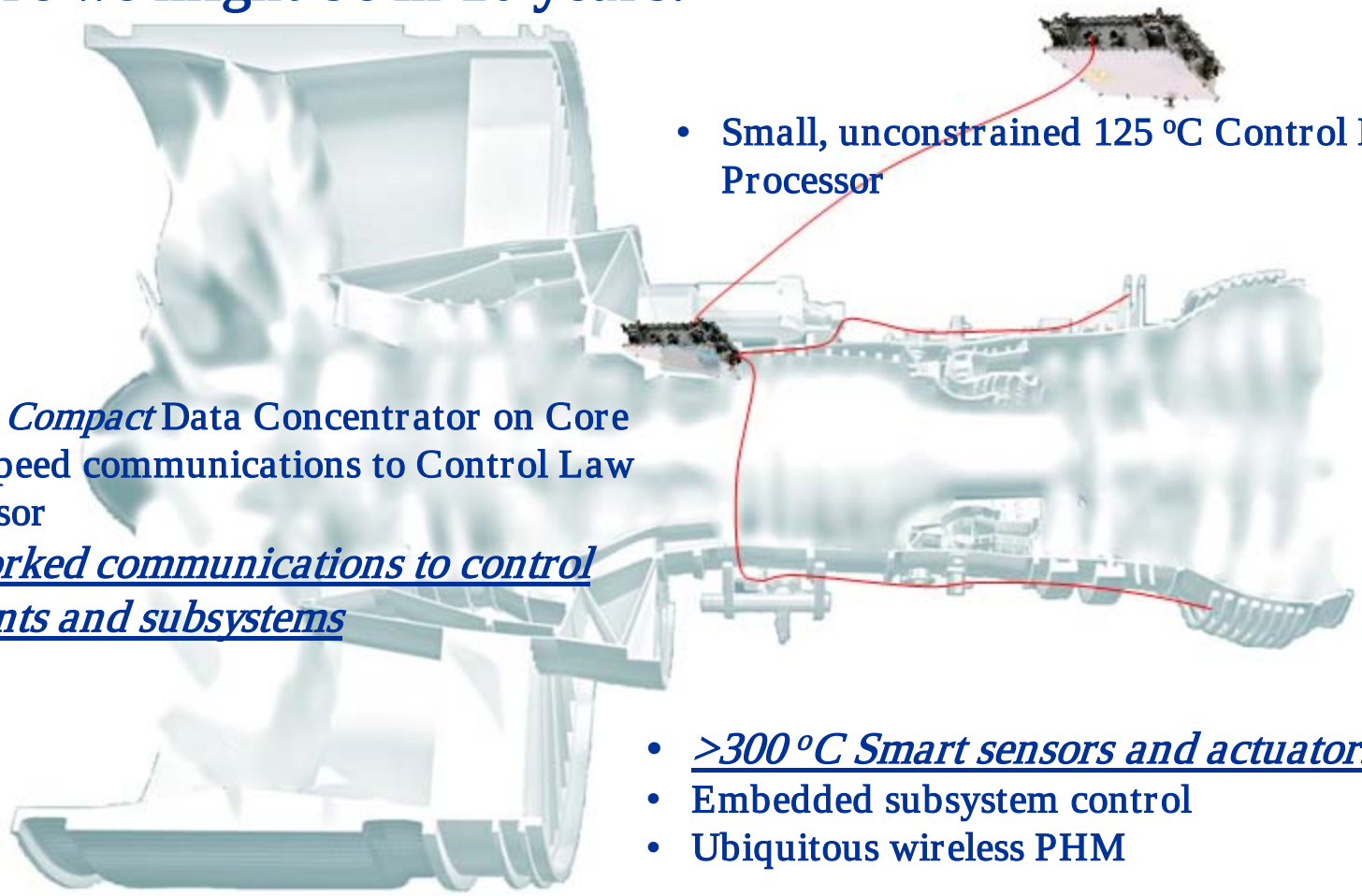

- Small, unconstrained 125 °C Control Law Processor

- 225 °C *Compact* Data Concentrator on Core
- High speed communications to Control Law Processor
- ***Networked communications to control elements and subsystems***

- ***>300 °C Smart sensors and actuators***
- Embedded subsystem control
- Ubiquitous wireless PHM

(Thanks Dennis Culley)

Concepts for Silicon Carbide Electronics: Present Capabilities and Near Term Technologies

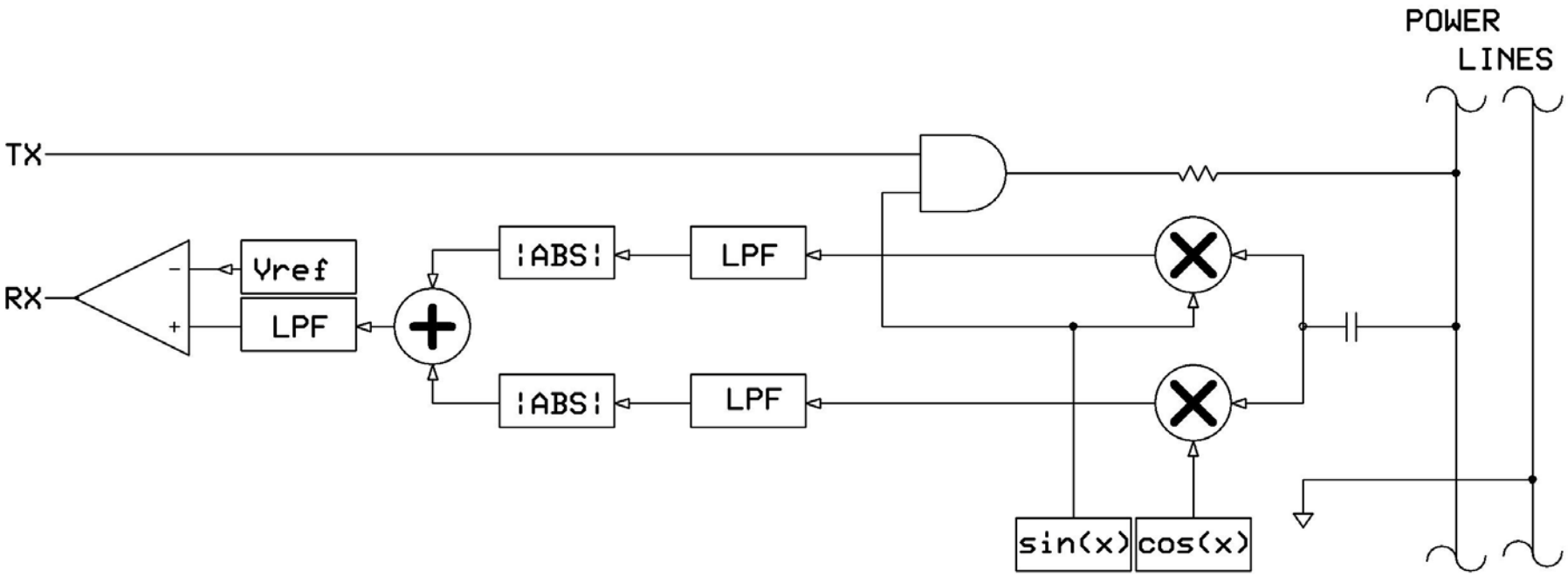

A few years ago, we developed a technique & circuit configured from high temp SOI components which connects a microcontroller's UART to power lines for two way digital communications over the power lines. (patent pending)

Concepts for Silicon Carbide Electronics:
Present Capabilities and Near Term Technologies

The Communications on the Power Lines

- Simple bit serial communications from UART
- Technique allows for collision detection
- Using different carrier frequencies allowed for multiple sub nets on the same power line set.
- A 225° Celsius solution to a subnet topography.

But we need >300° Celsius subnets

Silicon carbide technology isn't at the integration level of SOI.

Can we envision a technique for digital communication of sensor data simultaneously over the same medium which can be configured using Silicon Carbide?

Concepts for Silicon Carbide Electronics:
Present Capabilities and Near Term Technologies

Yep….Code Division Multiplexing

Code Division Multiplexing:

- Multiple sensor (information carrying) signals transmitting on the same combining medium (wire, air, etc.)

- Sensors can have the same modulation frequency, or not: technique uses orthogonal codes (Spreading Codes)for modulation and demodulation.

- Sensors can be separated from each other at the receiver: solves the “cocktail party problem”

Concepts for Silicon Carbide Electronics: Present Capabilities and Near Term Technologies

FREQUENCY F1: A FUNCTION OF SENSED VALUE

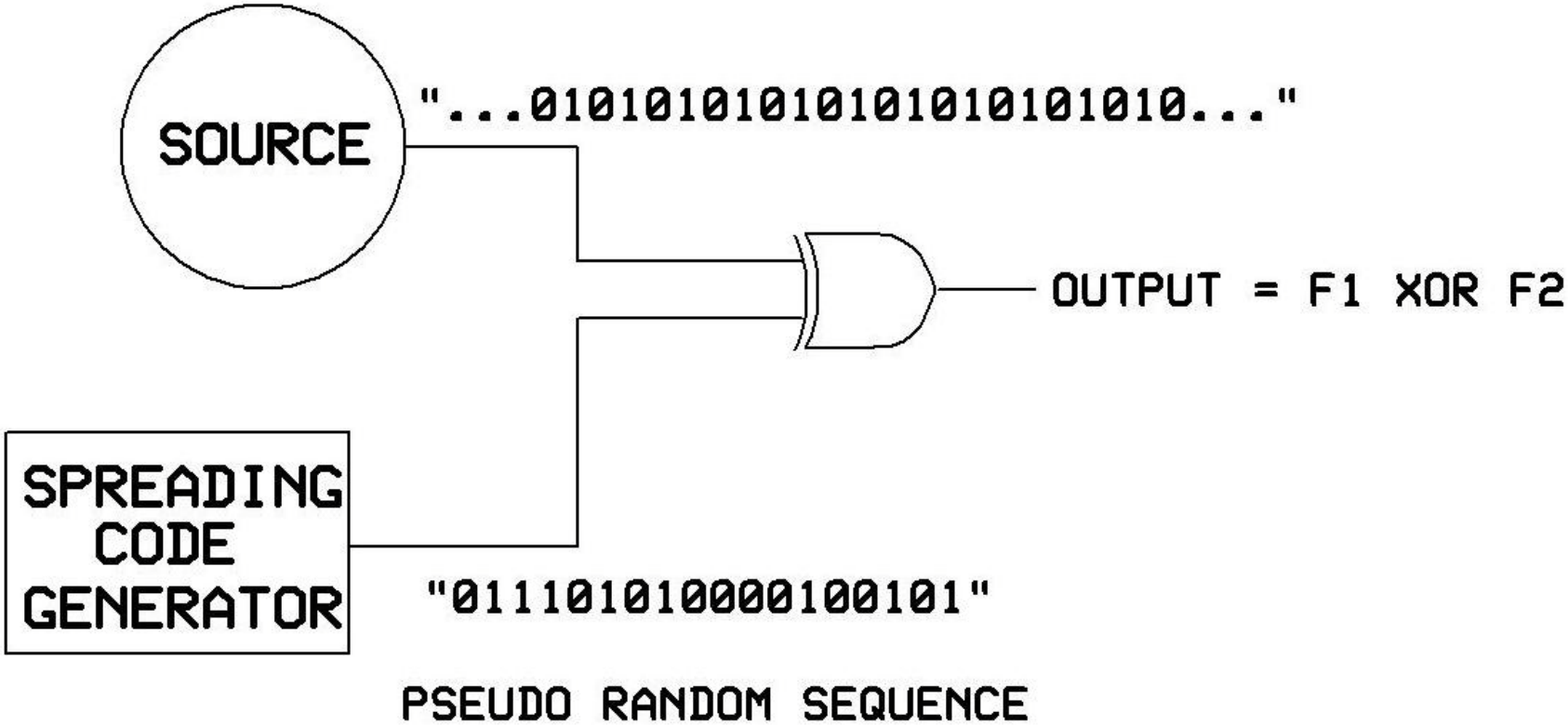

FREQUENCY F2 < F1 BY INTEGER AMOUNT (e.g. F2 IS 1/8 OF F2)

Concepts for Silicon Carbide Electronics: Present Capabilities and Near Term Technologies

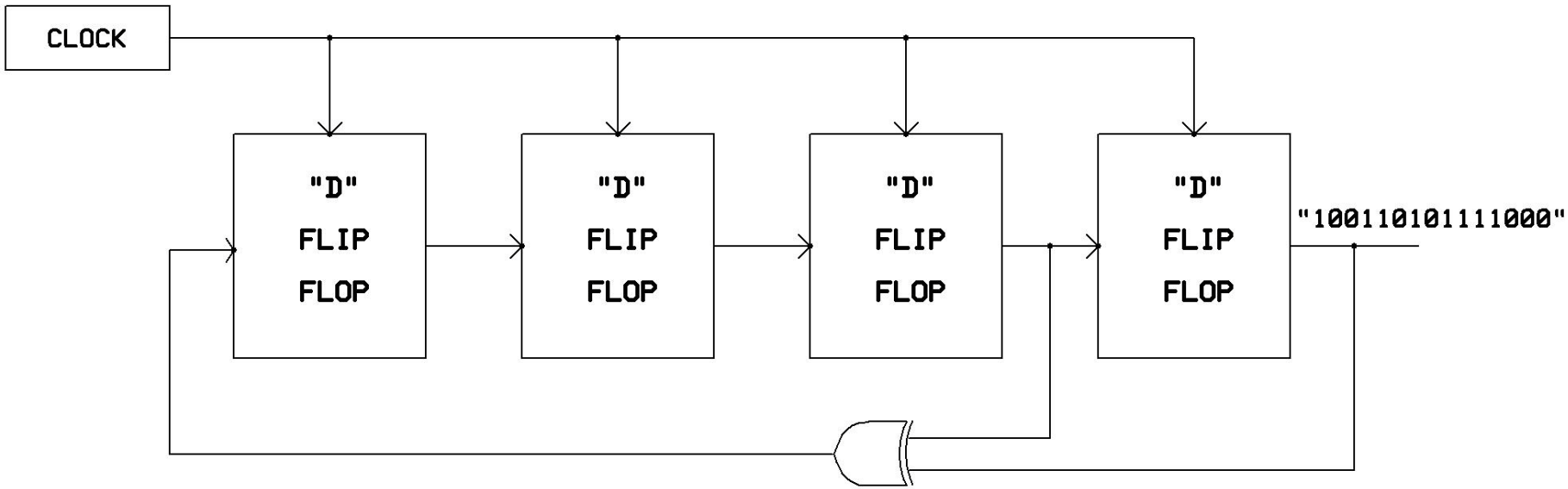

An example Spreading Code generator which can Be configured from SiC logic gates and flip flops as described earlier.

Concepts for Silicon Carbide Electronics: Present Capabilities and Near Term Technologies

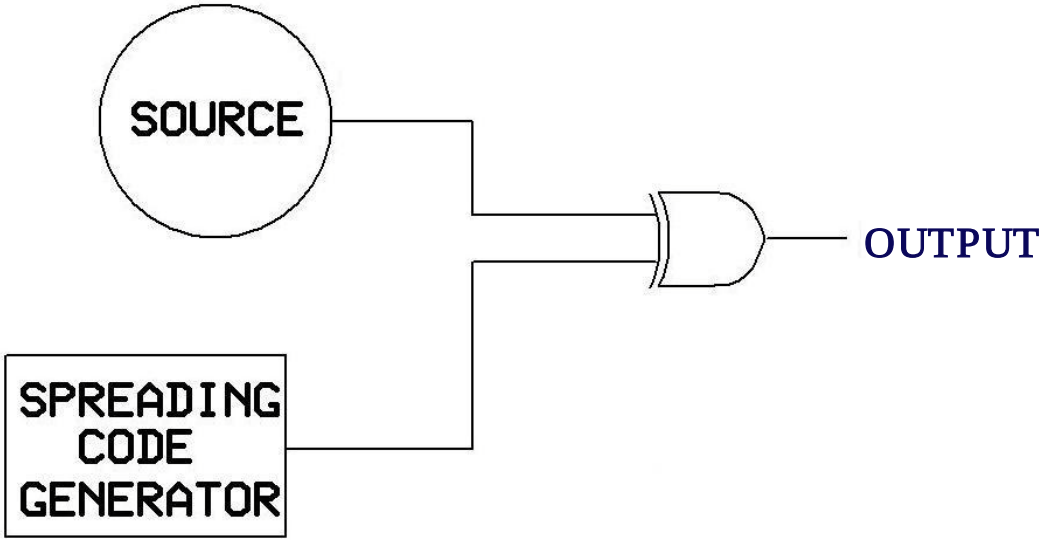

Source can be, for example -

- A SiC measurand to frequency converter
  - Simplest approach: CW sensor output whose output is digitization at the source
- A Complex SiC circuit
  - e.g. a SiC A/D converter

Concepts for Silicon Carbide Electronics: Present Capabilities and Near Term Technologies

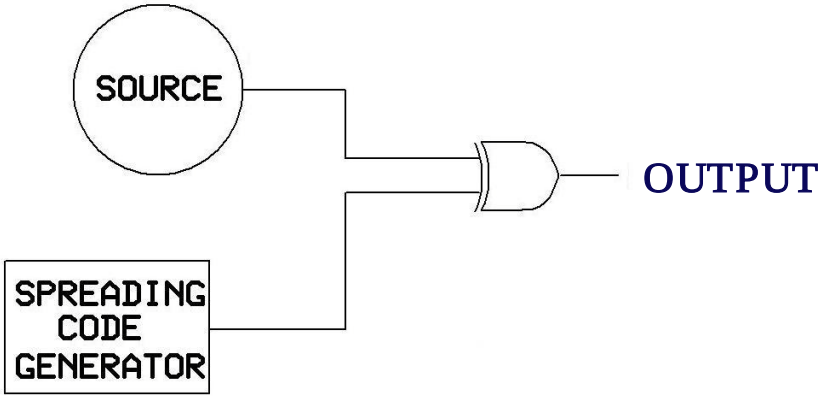

Circuit output is now spread by code generator

Output is coupled to power supply wires or data wire coming From Data Concentrator (slide 10)

At concentrator, a receiver circuit retrieves the various sensor outputs by using KNOWN spreading functions

Concepts for Silicon Carbide Electronics: Present Capabilities and Near Term Technologies

Currently we are capable of developing SiC logic gates and the Flip/Flops necessary to create the circuits needed for CDM.

We are now working on developing the linear and nonlinear circuit functions such as amplifiers and comparators to allow us to configure signal conditioning and mixed signal (e.g. A/D converter) components.

These capabilities enable the creation of >300° Celsius smart sensors within a networked communications system containing a 225° Celsius data concentrator. These smart sensors are foreseen to be available within the 10 year transition period from a centralized to a networked control system for aircraft engines.

NASA Glenn High Temperature (500 °C) SiC IC Program

Phil Neudeck and Glenn Beheim

NASA Glenn Research Center

http://www.grc.nasa.gov/WWW/SiC/

NASA Glenn Research Center
Propulsion Controls and Diagnostics Workshop
Cleveland, OH
8-10 December 2009

Acknowledgements

Work carried out by NASA Glenn Research Center

D. Spry, L. Evans, R. Okojie, R. Meredith, T. Ferrier,
M. Krasowski, N. Prokop
NASA Glenn Research Center

L. Y. Chen
Ohio Aerospace Institute

C. Chang and D. Lukco
ASRC Aerospace Corporation

Technical Support Team
K. Laster, J. Gonzalez, C. Blaha, R. Buttler, K. Moses

High Temperature Electronics Benefits to NASA Missions

Intelligent Propulsion Systems

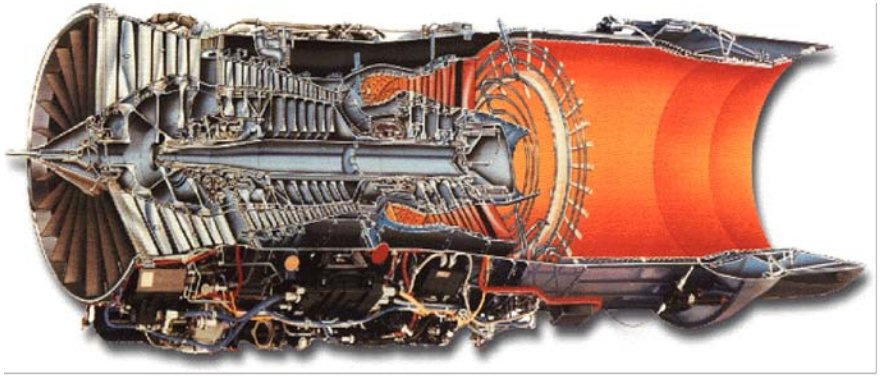

Space Exploration Vision PMAD

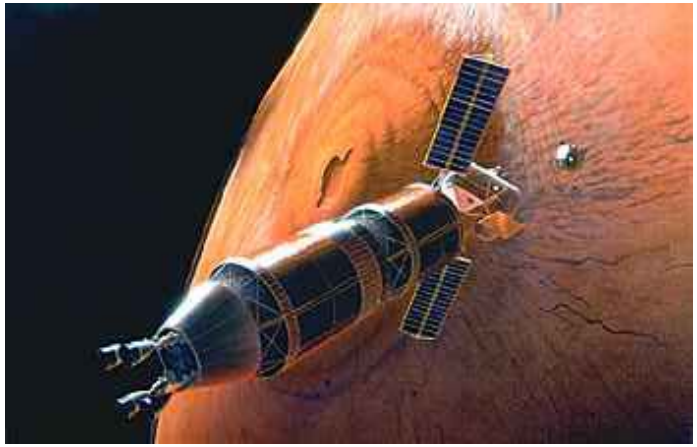

More Electric + Distributed Control Aircraft

Venus Exploration

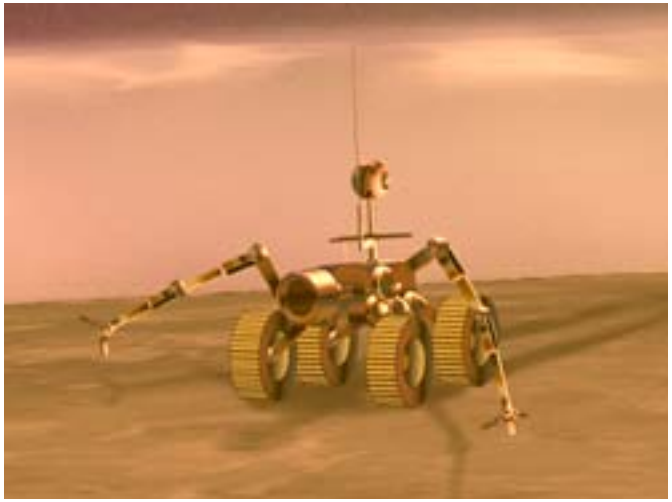

Intelligence included throughout the engine requires the development of High Temperature Electronics capable of prolonged operation

Key compressor and exhaust regions beyond realm of silicon

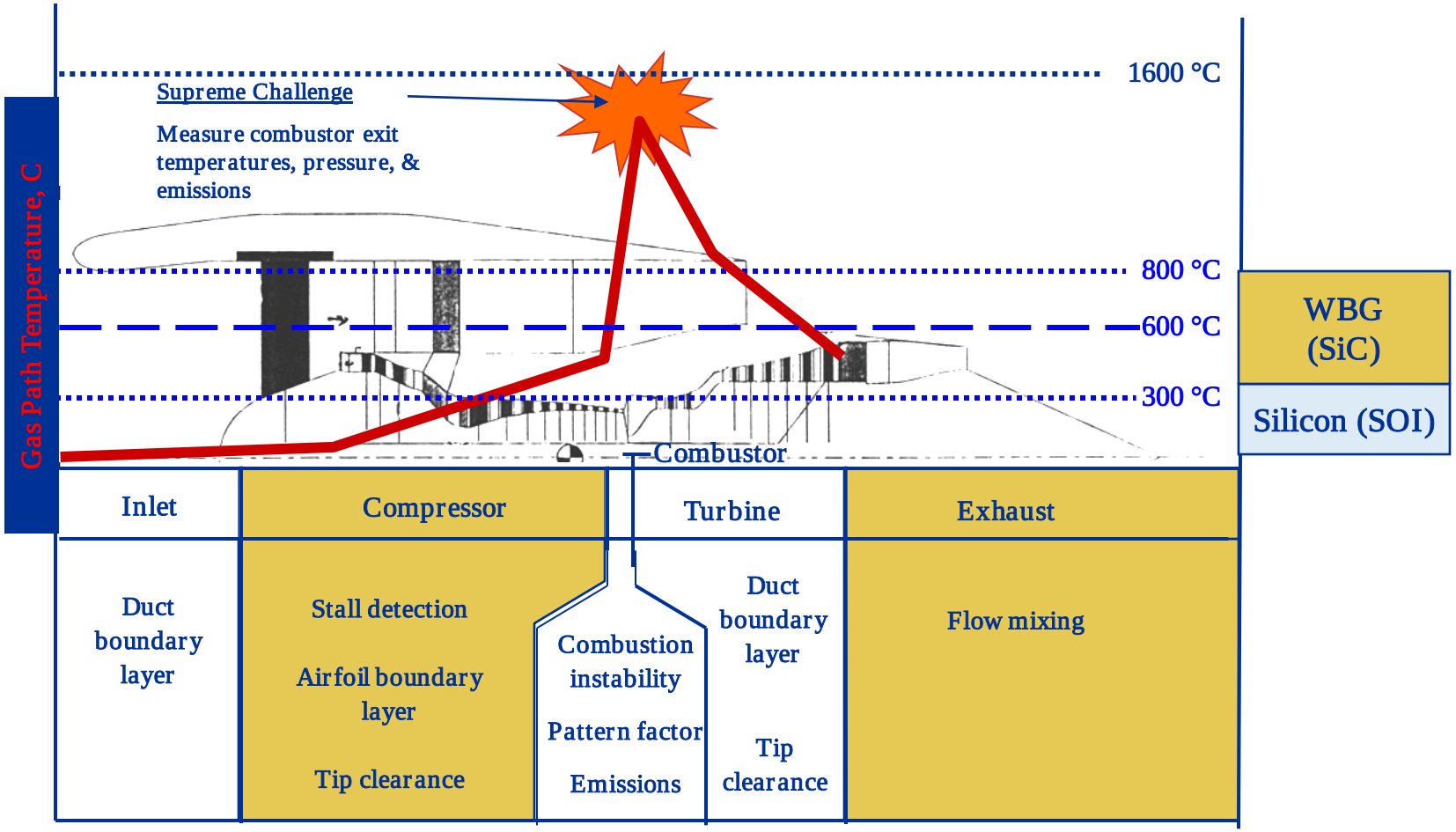

High Temperature Integrated Circuit Technology

For T < 150 °C, bulk silicon MOSFET (CMOS) is basic building block of almost all (> 95%) integrated circuits in use today (computers, cell phones, etc.).

For T < 300 °C, well-developed Silicon-On-Insulator (SOI) VLSI IC's available for low-power logic and signal processing functions.

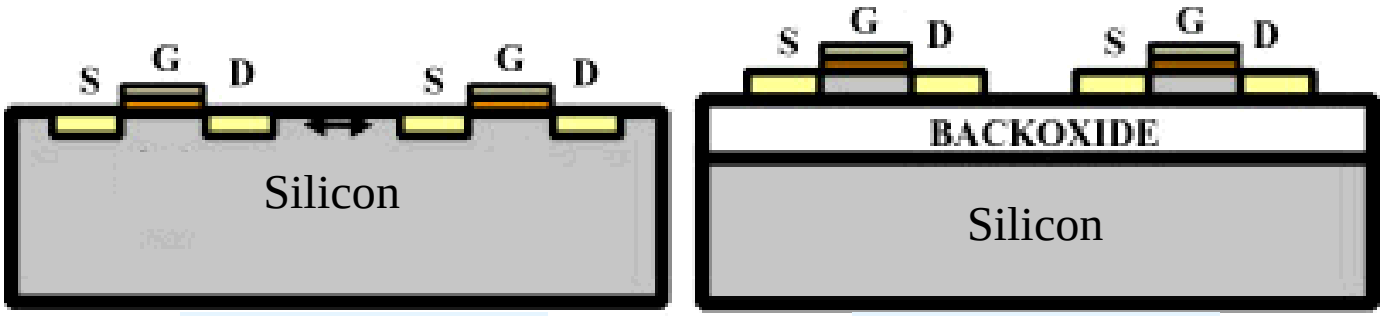

Bulk CMOS

SOI CMOS

Honeywell

Above 300 °C ambient, wide bandgap semiconductors (SiC) are needed.

- Beyond physical limits of silicon IC's (including "high T" silicon chips).

Many areas of sensing and control interest in jet engines are hotter than 300 °C.

Peak compressor gas T near 500 °C, higher for combustor & exhaust.

For power electronics, SiC has significant potential advantages over entire temperature range of interest (-55 to 250 °C and higher).

Major Markets for SiC Electronics

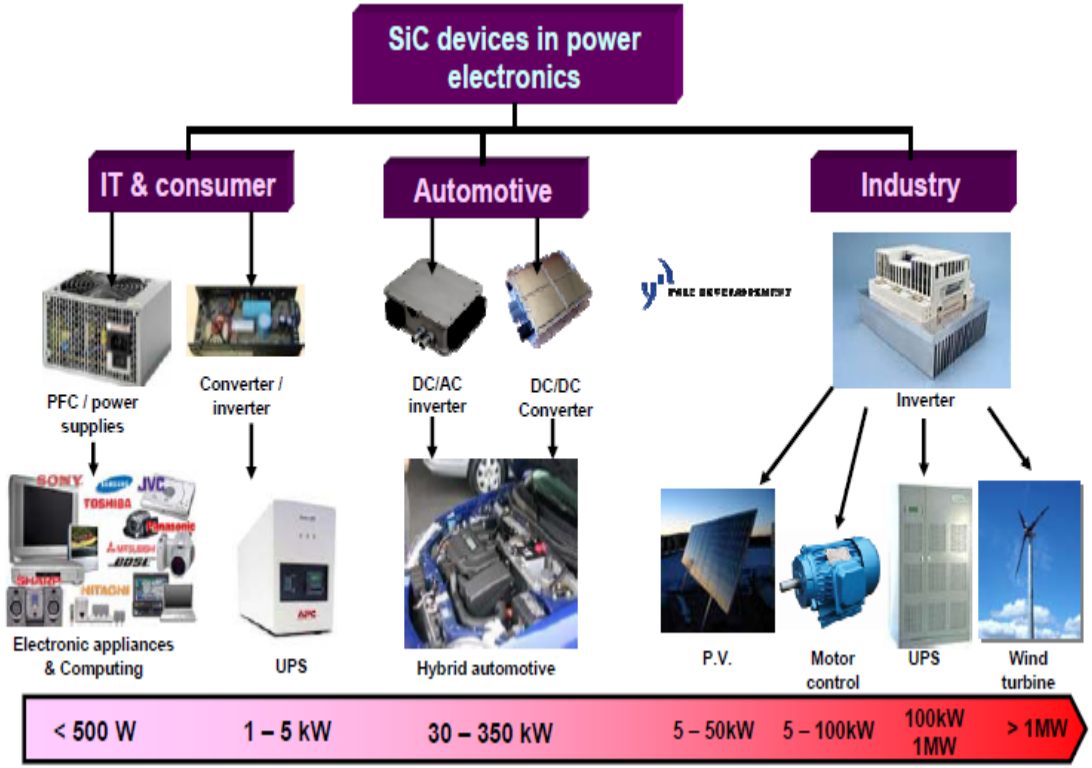

Most of these major markets do not require operation in hot environments. These large markets are motivating development of key SiC technologies:

-SiC crystal growth

- SiC/SiO2 interface quality (for MOS)

- Bipolar, JFET, Schottky devices

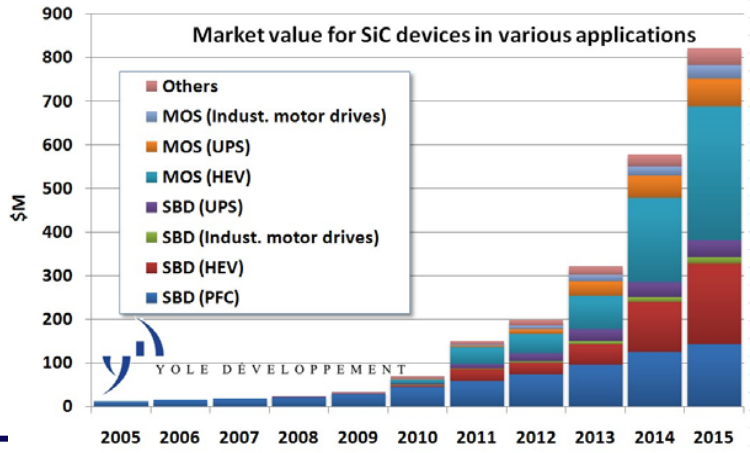

Development of High-Temperature SiC Integrated Circuits

FY08	FY09	FY10	FY11	FY12	FY13	FY14

Transistors per chip: 10 → 100 → 1000

SiC Integrated Circuit Demonstrations:

- Digital NAND, NOR gates
  Analog differential amplifier
- Operational Amplifier
  A/D Converter
  Multiplexer
- Microcontrollers

500 °C demo
In-package amplifier for SiC dynamic pressure sensor (Supersonics/ERA)

~ Apollo Guidance Computer levels of integration (mid 1960's)

500 °C demo
Digital electronics for transmission of sensor signals on power cable (SFW)

500 °C demo
Wireless capacitive pressure sensor for propulsion health monitoring (IVHM)

~ First microprocessor levels of integration (Intel 4004, released 1971)

500 °C demo
Venus seismometer (PIDDP)

Enabling Technologies for SiC Electronics:

- Metal-to-SiC contacts
- High temperature packaging
- SiC transistor (JFET) design

Multilevel Interconnect Structure:
- Conformal metal layers
- High temperature insulating layers

- Increase circuit density
- Increase reliability and yield
- Reduce crystalline defects

SiC Electronics Development at NASA Glenn

Funding Program	High Temperature SiC Electronics Application	Rationale	Emphasis
IVHM	Wireless sensors for propulsion health monitoring	o Energy scavenging ---Fully wireless o Readily retrofit o First insertion of wireless---Safe	RF
SFW Distributed Engine Control	Smart sensors and actuators with digital I/O	Reduce cable count o Sensor bus o Data on power line o Close loop within actuator	Digital
Supersonics & ERA	In-package amplifier for SiC pressure sensor (for active combustion control)	High level output o Detect sub psi instabilities o Initiate control early o Reduced EMI susceptibility	Analog
Department of Energy	SiC crystal growth methods for reduced defect densities	Reduced defects for o Increased yield/reliability o Large area/high voltage devices	Power

Key Problem: Lack of High Temperature Durability

Driven by market considerations, almost all wide band gap transistor work has focused on high power or high frequency metrics for T < 200 °C applications.

Computer power supplies, industrial motor drives, radar, cell base stations.

Of the examples of semiconductor transistor integrated circuit demonstrations in the published literature, none prior to this work demonstrated stable electrical operation beyond a few hours at T ≥ 500 °C.

Initial Goal: Highly durable 500-600 °C integrated circuit technology foundation.

- Prolonged operation without cooling, physically small, up-scalable.
- Sensor signal conditioning and data transmission (wireless).

NASA GLENN UNIQUE RANGE OF HARSH ENVIRONMENT TECHNOLOGY AND CAPABILITIES

Range of Physical and Chemical Sensors for Harsh Environments

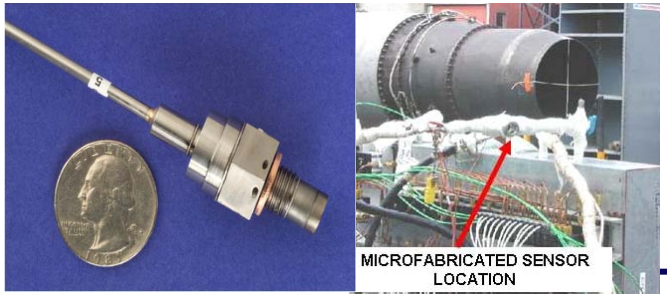

Microfabrication Laboratory SiC Clean Room Processing

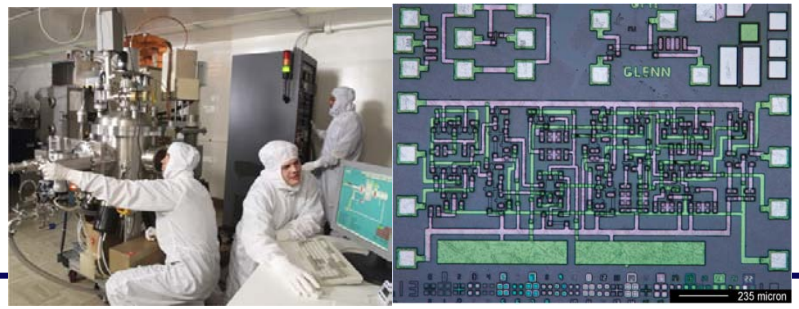

Intelligent Sensor Mini-Systems

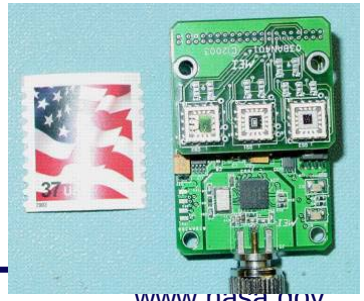

Previous Key NASA Glenn Advancements

Key fundamental high temperature electronic materials and processing challenges have been faced and overcome by systematic basic materials processing research (fabrication and characterization).

500 °C Durable Metal-SiC Contacts
(R. Okojie, 2000 GRC R&T Report)

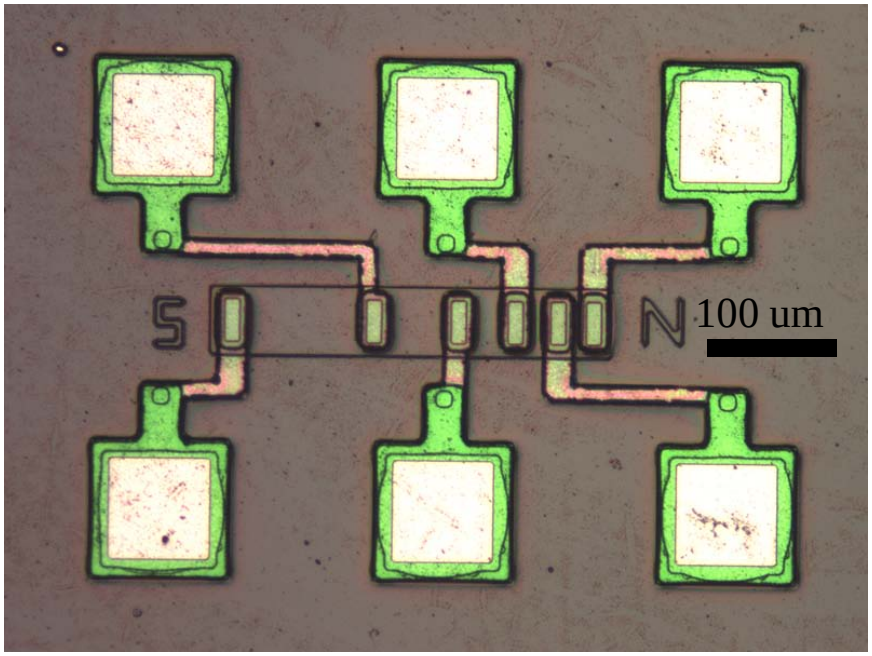

500 °C Durable Chip Packaging
And Circuit Boards
(L. Chen, 2002 GRC R&T Report)

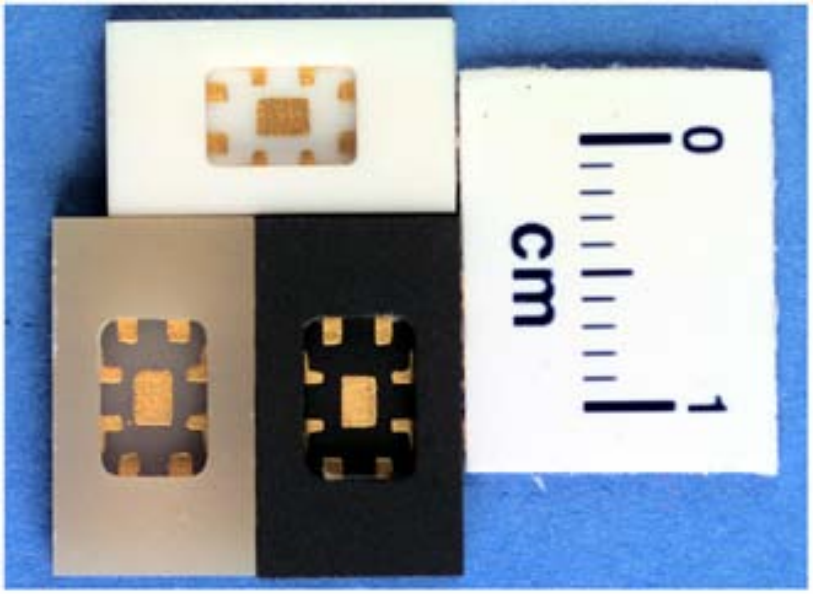

Additional advancements in device design, insulator processing, etc. also made.

2007 SiC Transistor Structure

6H-SiC Junction Field Effect Transistor (JFET)

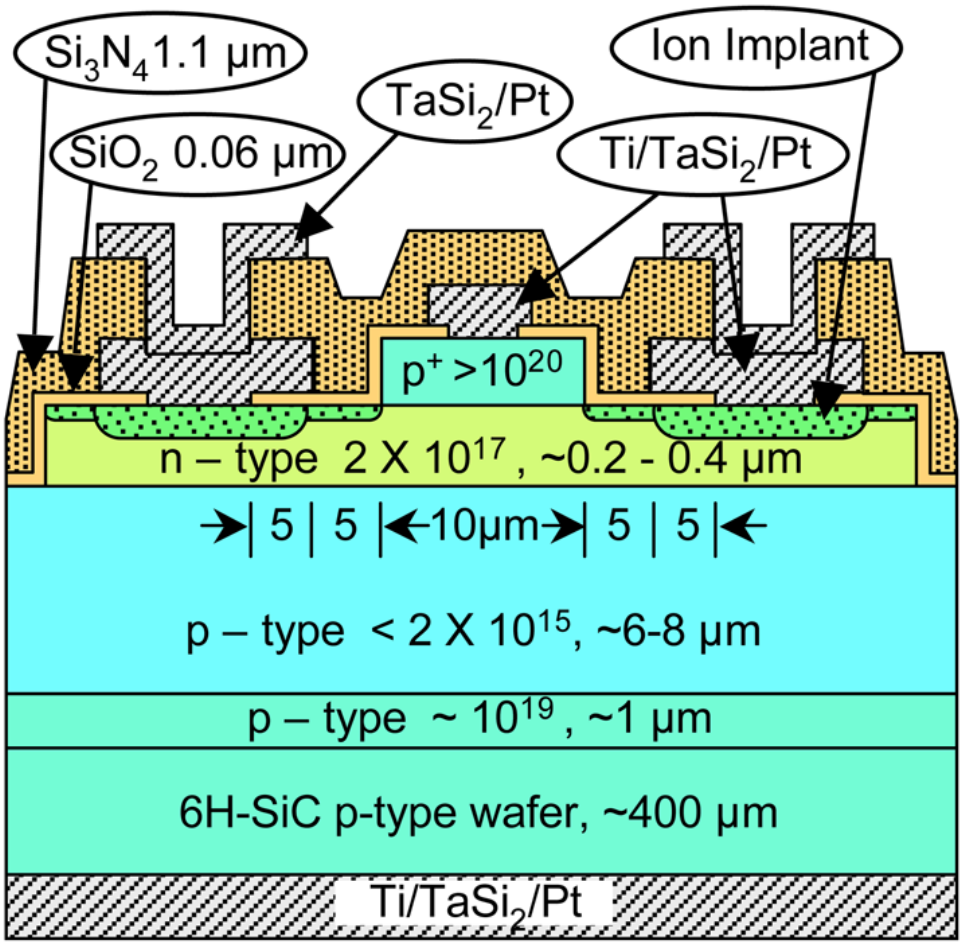

- 6H p-type SiC wafer with epilayers (purchased from Cree)
- Two p-type epilayers
  - ~10^{19}, ~ 1 µm (buffer layer)
  - ~10^{15}, ~ 6-8 µm
- n-type channel
  - ~ 2x10^{17}, ~0.2-0.4 µm
- p^+ gate ~10^{20}, ~ 0.14 µm
- Nitrogen implants
  - ~ 10^{18} cm^{-3} self-aligned
  - ~ 10^{20} cm^{-3} source/drain
  - 30 min 1200 °C Ar anneal
- Ti/$TaSi_2$/Pt contacts
- Oxide (wet/rewet) and sputtered nitride passivation
- $TaSi_2$/Pt interconnect metal (single layer interconnect)
- Metal patterning was dry/wet no ion damage to dielectric

Designed for 500 °C durability instead of high frequency/power.

Discrete SiC Transistor Test

6H-SiC Junction Field Effect Transistor (JFET)

200µm/10µm 6H-SiC JFET

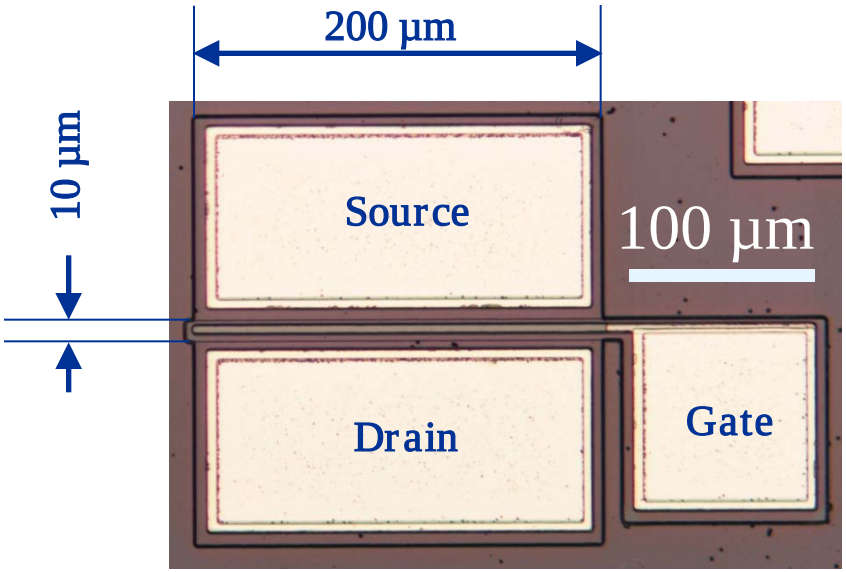

Optical micrograph of device before packaging

Packaged with bond wires

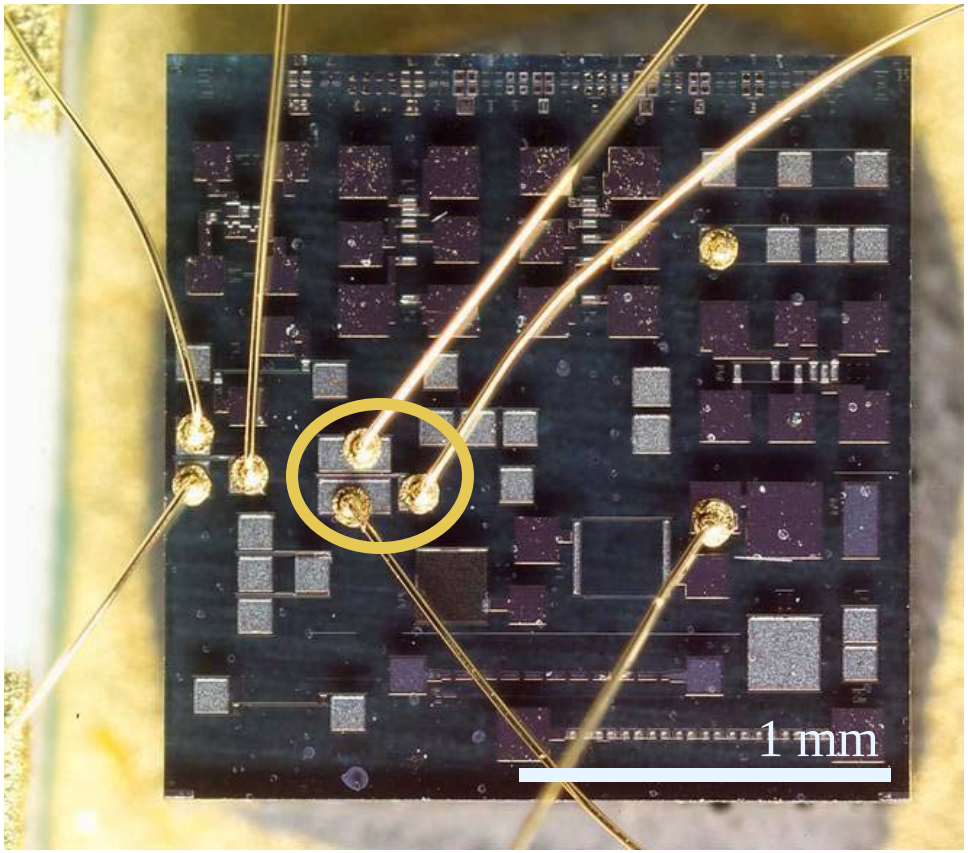

Packaged Devices and Test Setup

Parallel fabrication and testing of both single-transistors and IC's

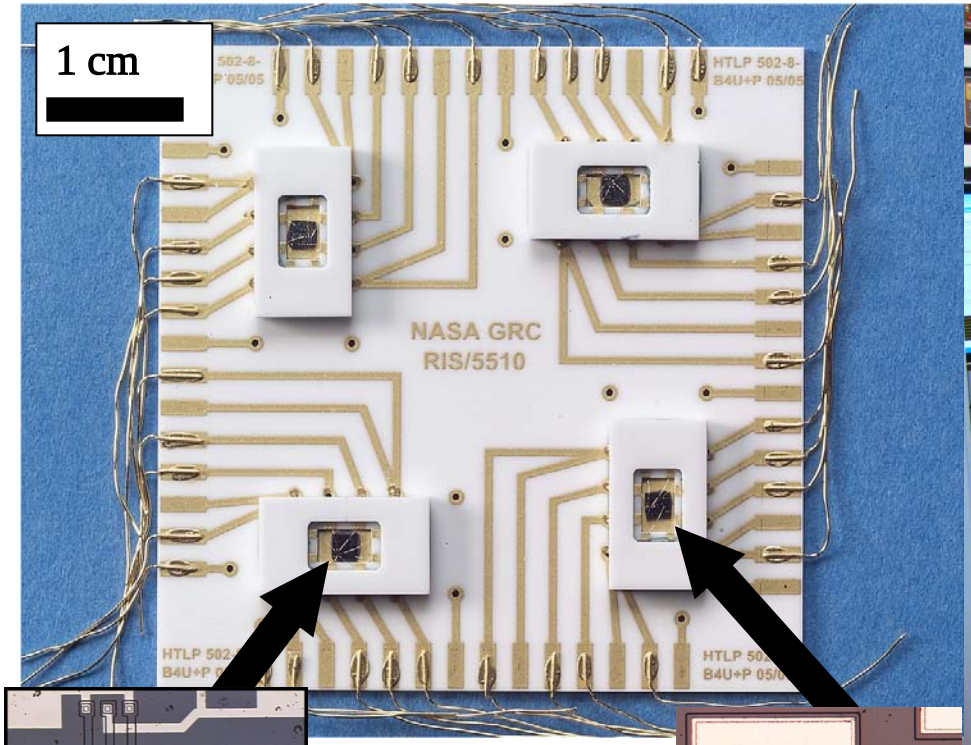

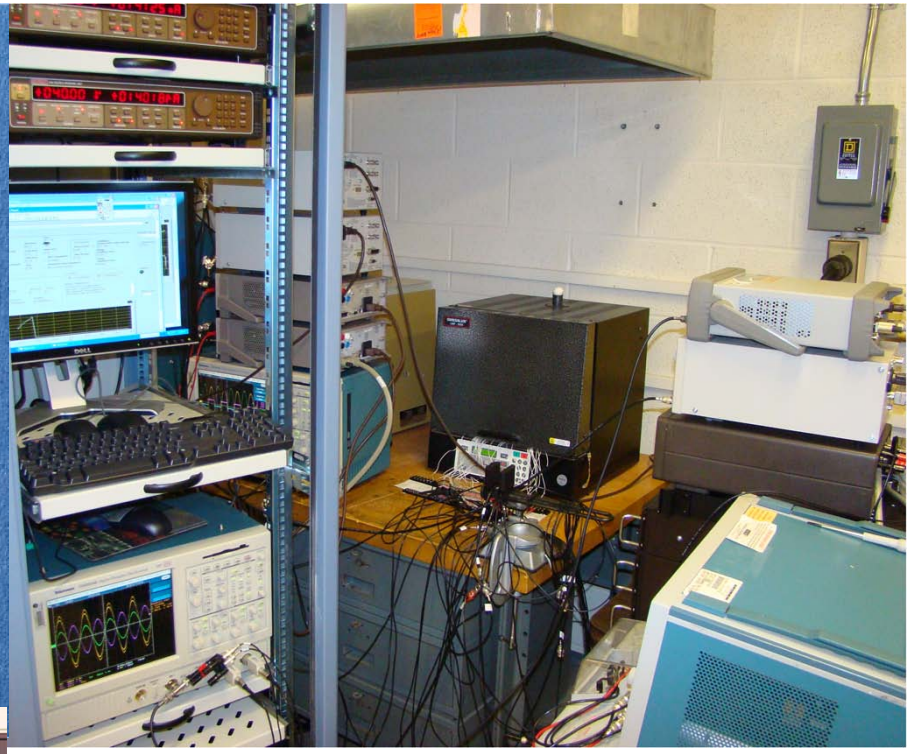

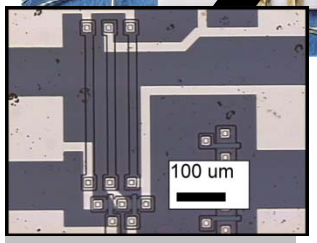

Differential Amplifier

200µm/10µm 6H-SiC JFET

Boards with chips reside in ovens.

Oxidizing atmospheric air at 500 °C.

Wires to test instrumentation.

Continuous electrical testing at 500 °C.

NASA Glenn Discrete SiC JFET Transistors: First to Surpass 10,000 Hours of Stable Electrical Operation at 500 °C

Current-voltage characteristics are **very good and stable** for 10,000 hours

- Foundation for digital and analog integrated circuits.

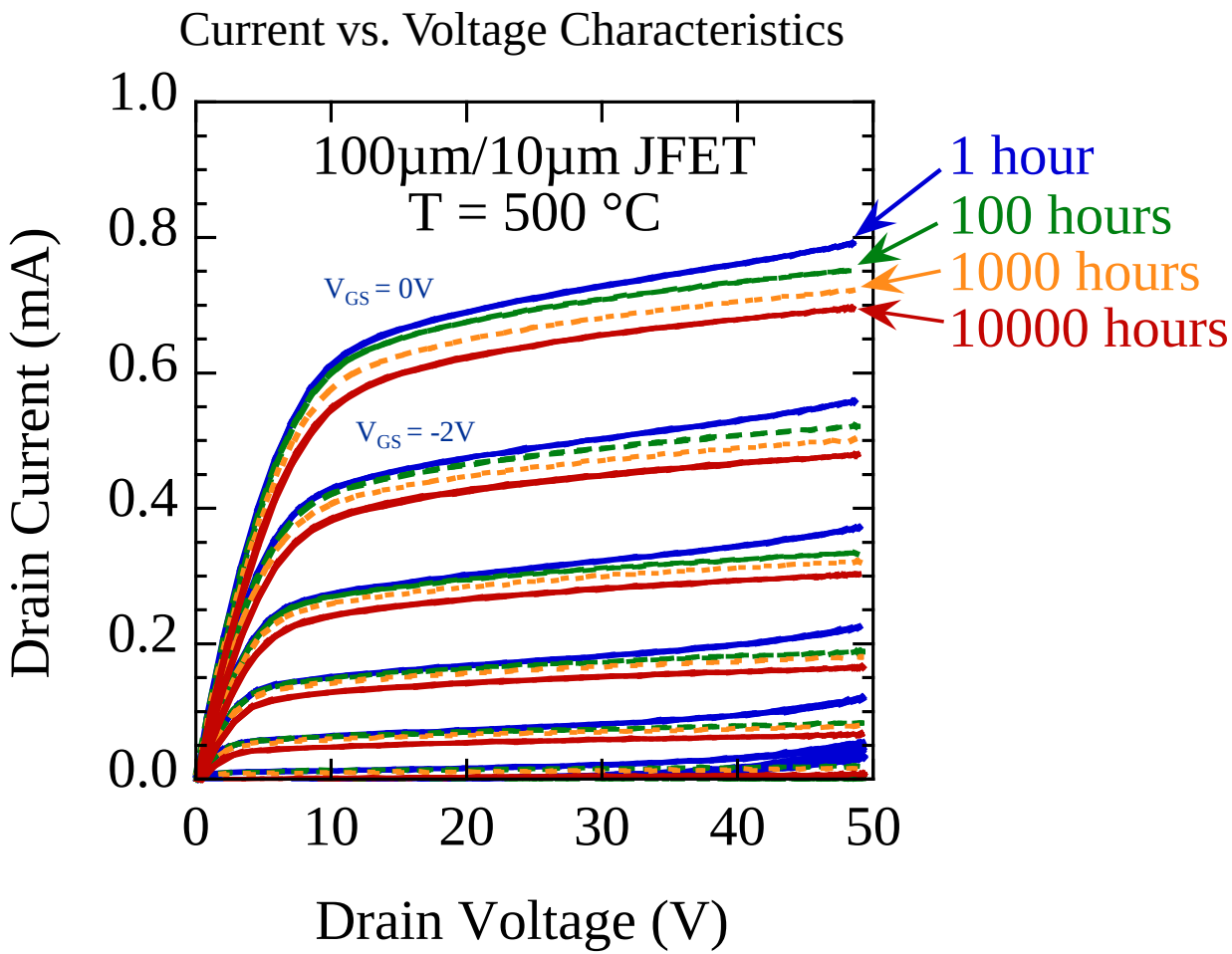

Less than 10% degradation occurs during 10,000 hours operation at 500 °C

JFET Parameters vs. Time at 500 °C

Normalized data from 200µm/10µm and 100µm/10µm JFETs

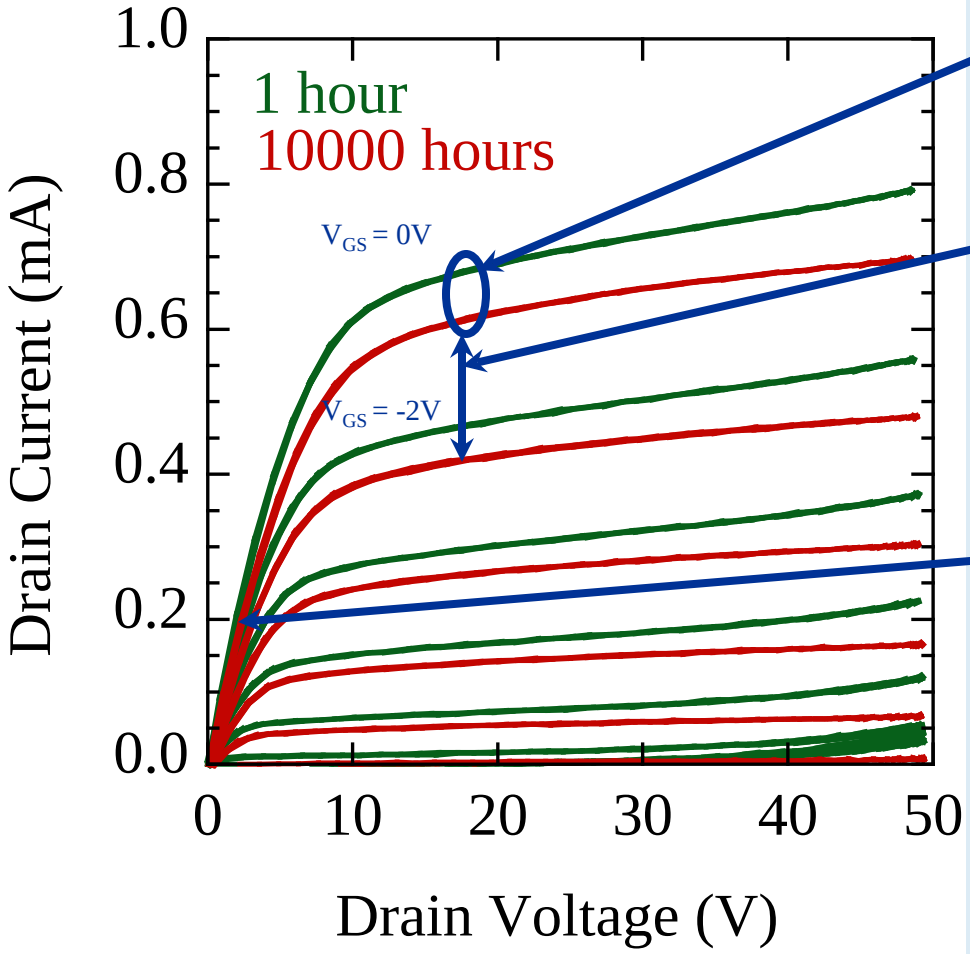

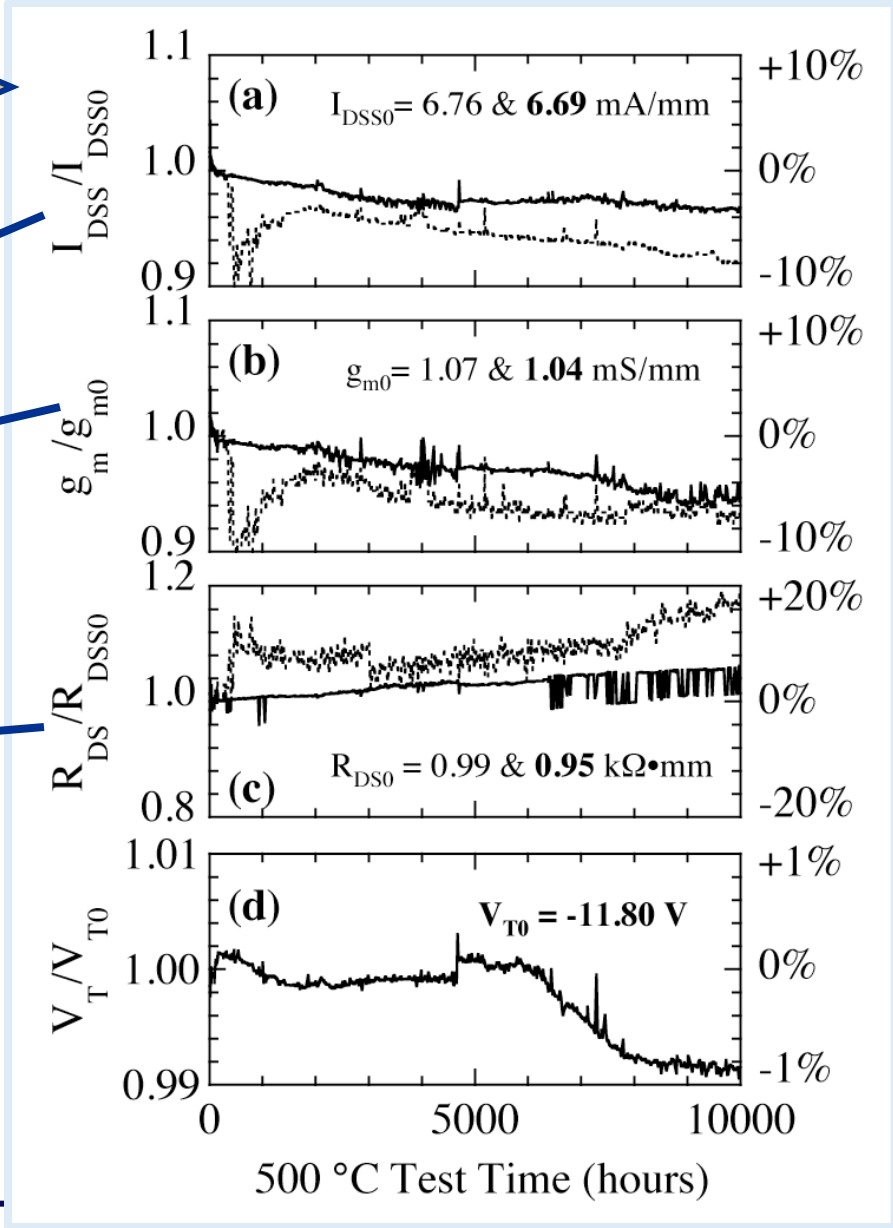

NASA Glenn Silicon Carbide Differential Amplifier

World's First Semiconductor IC to Surpass
6000 Hours of Electrical Operation at 500 °C

Demonstrates CRITICAL ability to interconnect transistors and other components (resistors) in a small area on a single SiC chip to form integrated circuits that are durable at 500 °C.

Optical micrograph of demonstration amplifier circuit before packaging

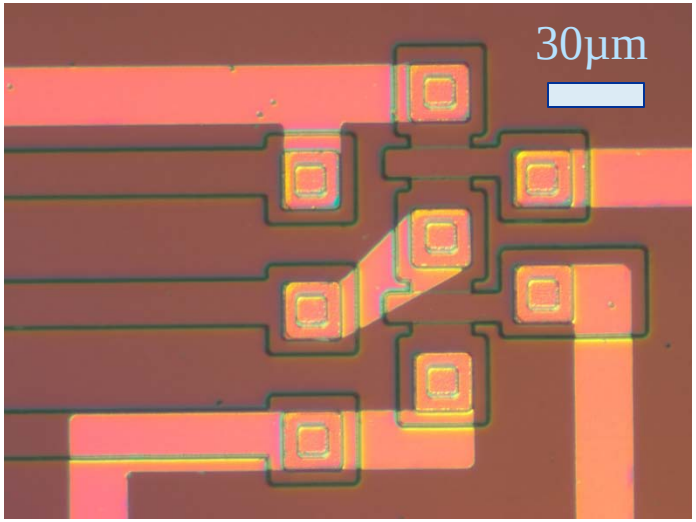

2 transistors and 3 resistors integrated into less than half a square millimeter.

Single-metal level interconnect.

Amplifier test voltage waveforms

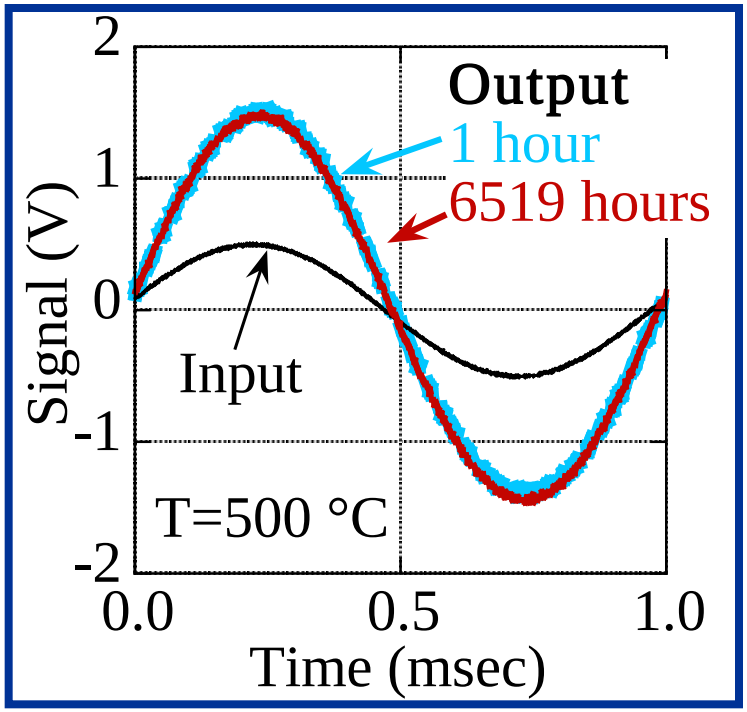

Less than 5% change in operating characteristics during 6500 hours of 500 °C operation.

NASA Glenn SiC JFET NOR Gate IC

World's First Semiconductor Digital IC to Surpass 2000 hours of 500 °C Operation

Circuit Schematic

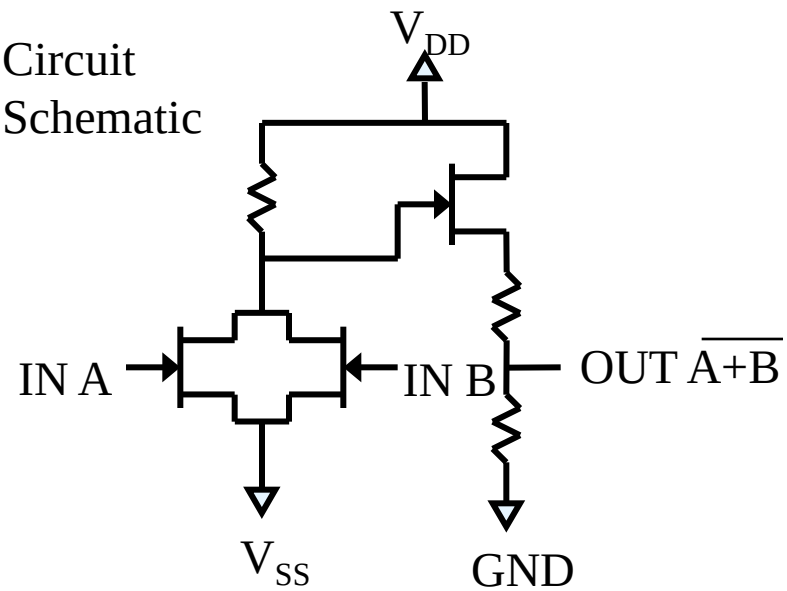

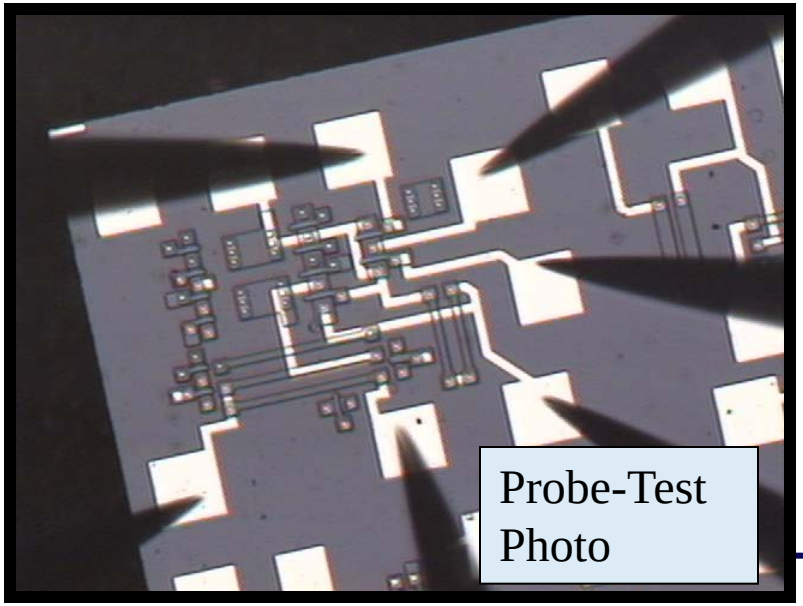

Waveforms of **packaged** NOR gate at 500 °C

T = 500 °C

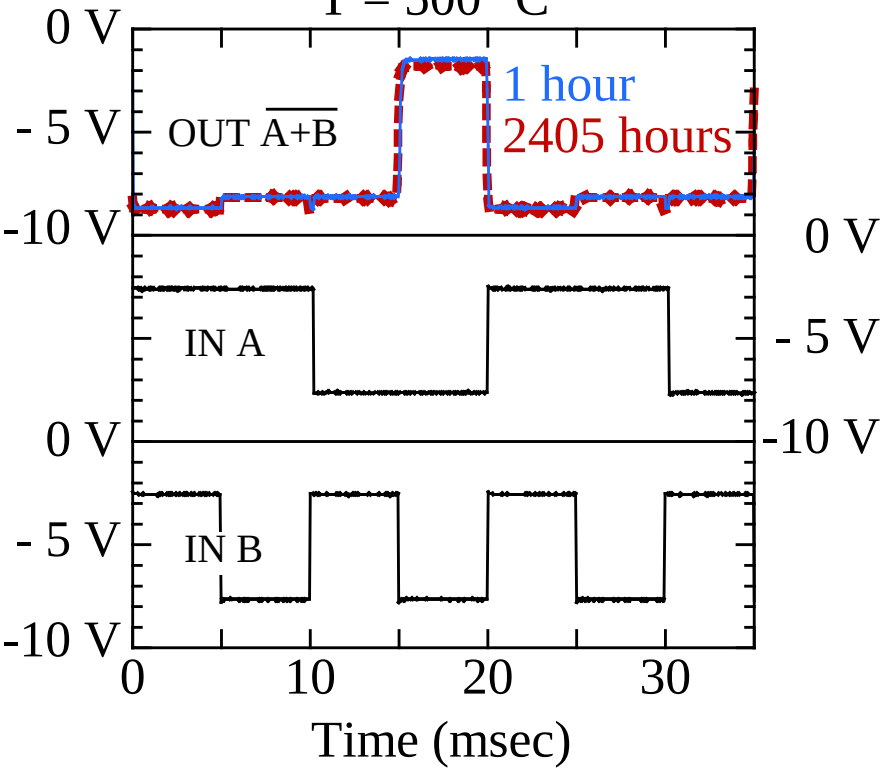

Digital chip failures between 2000 & 4000 hours

- Higher supply voltages than analog circuits
- Interconnect/insulator failure (?)

500 C circuit durability was limited by un-optimized dielectric & interconnect stack.

- Circuits failed after few thousand hours of 500 °C operation.
- No discrete JFET failures observed through 10,000 hours @ 500 °C.

As-fabricated chip

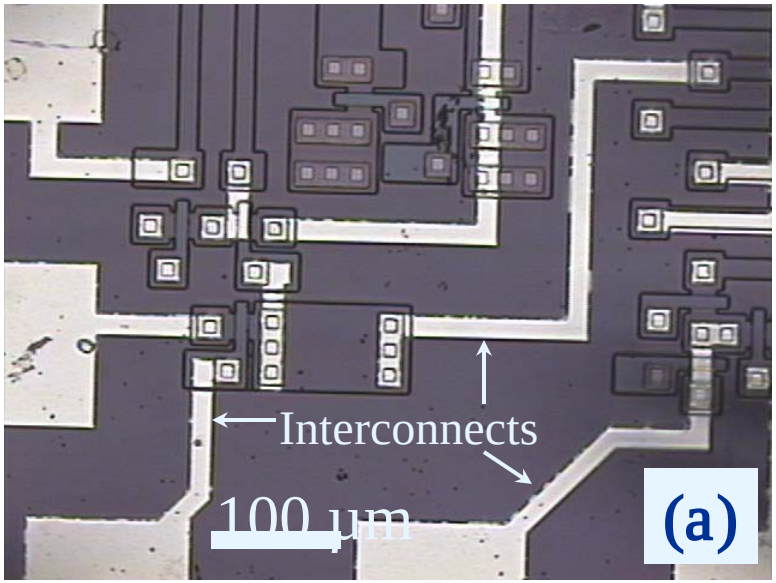

After prolonged 500 °C test

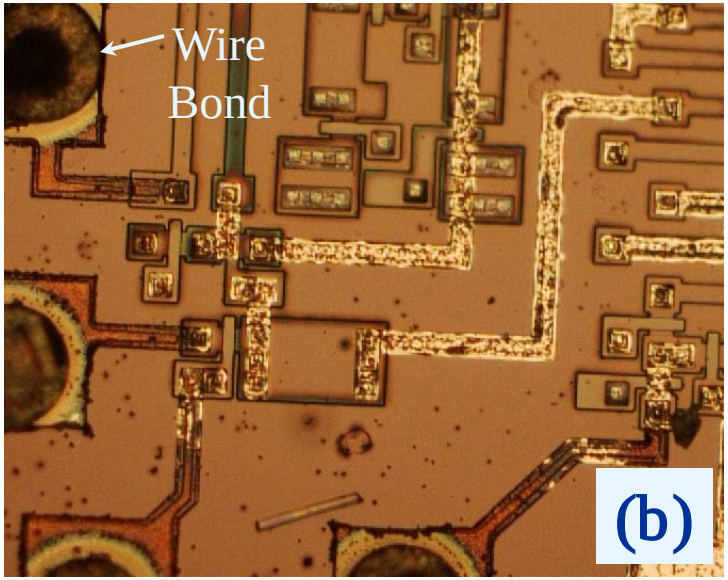

Present NASA GRC research is focusing on understanding interconnect failure and implementing revised multi-level interconnect process.

Temperature Performance Issues

2008 IMAPS Int. High Temperature Electronics Conference

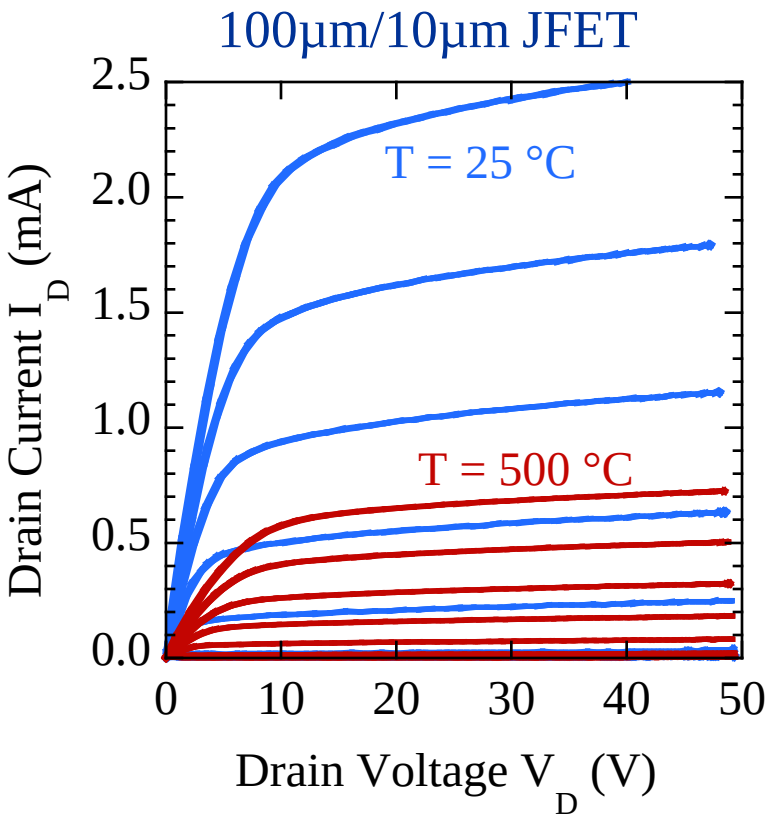

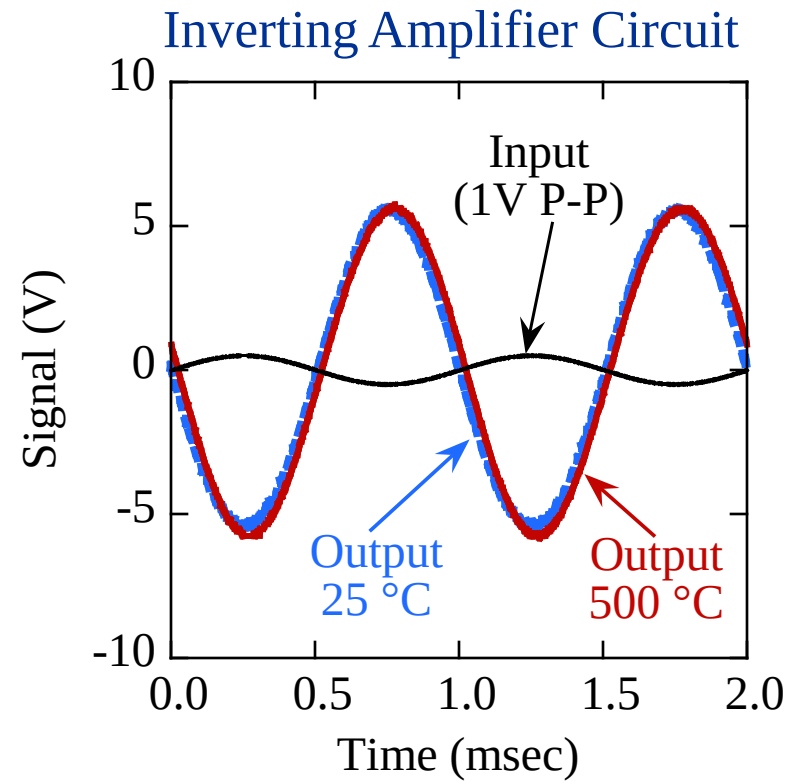

Despite large (> 3X) change in JFET characteristics…

…nearly temperature-independent circuit operation can be achieved.

Transistor and Amplifier Temperature Behavior

Transistor Parameters

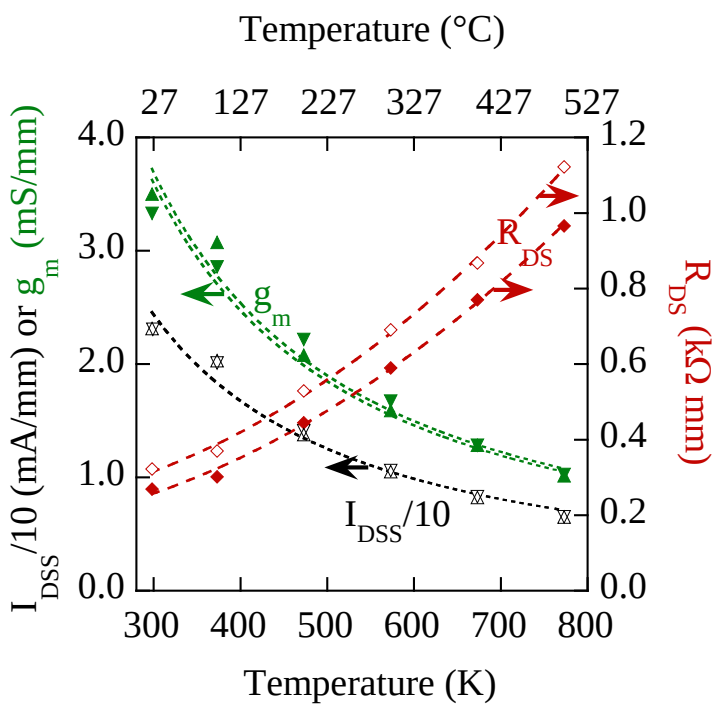

Amplifier Gain vs Freq.

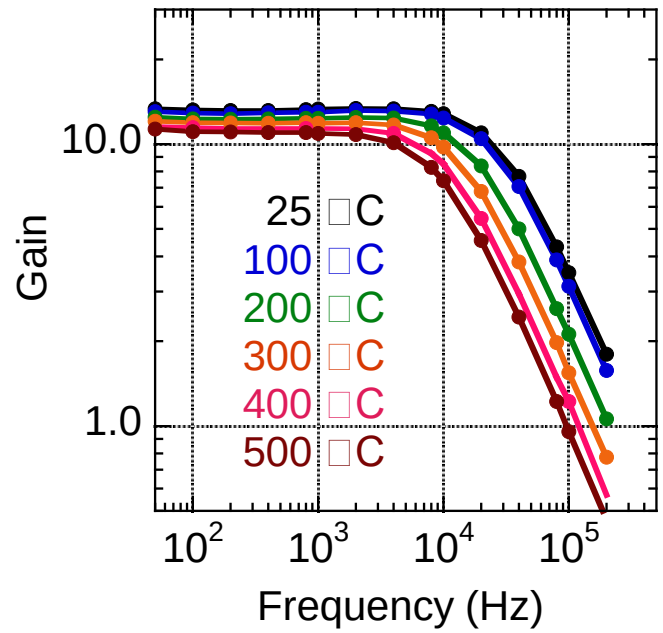

JFET and resistor characteristics mostly governed by conduction of same n-type SiC epitaxial layer.

Resistance goes up nearly the same (~3.5X) as JFET gain goes down with T.

Stage gain (proportional to gain x resistance) changes little (~22 %).

Speed/frequency drops with bias current (R-dominated RC time constant change).

SPICE Transistor Modeling

SPICE Level 1 NMOS (silicon) model was selected to model SiC N-Channel JFETs

- Straightforward and rapid to implement first-order FET model
- Based on empirical fitting of measured transistor electrical data
- Temperature-dependent channel mobility (NOT in SPICE JFET model)
- Substrate effects of body bias & capacitance (NOT in SPICE JFET model)
- Model ignores JFET gate leakage (reverse-bias, gate diodes addable)

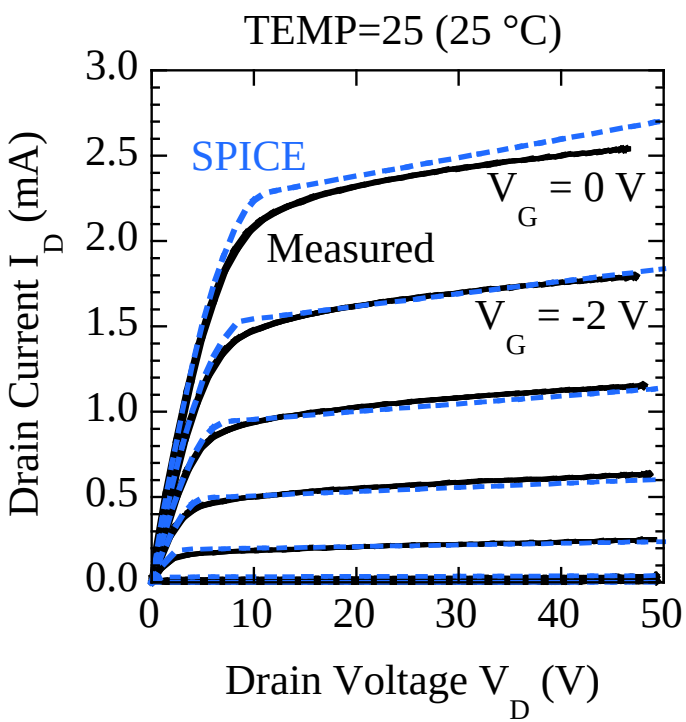

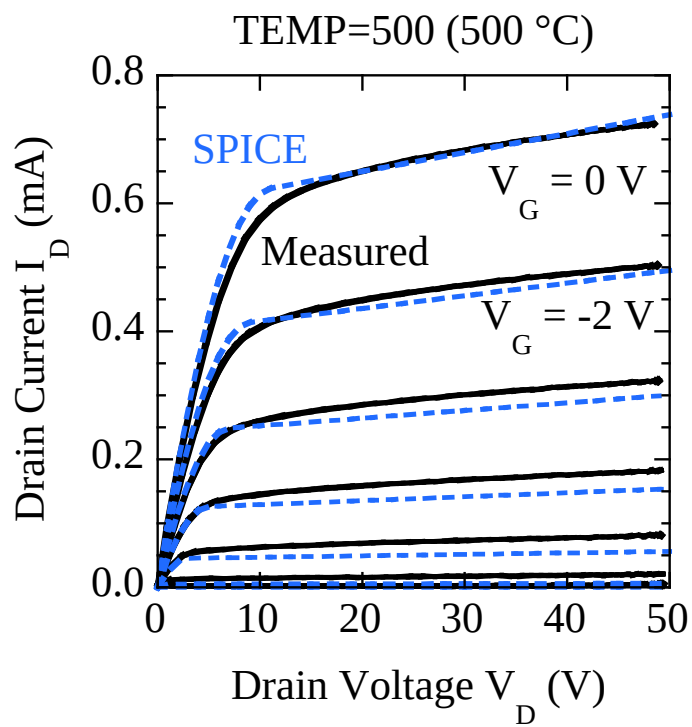

Two silicon material parameters built into SPICE source were modified for 6H-SiC.

- default NMOS surface potential (~ $E_G/2$, from 0.6 V to 1.6 V)
- channel mobility temperature exponent (BEX, from $T^{-1.5}$ to $T^{-1.3}$)

SPICE Circuit Modeling

Reasonable agreement between measured and SPICE characteristics are obtained.

- 25 °C to 500 °C temperature range changing only TEMP parameter
- DC and AC analysis of analog and digital test circuits
- Dimensional layout scaling of transistor and resistor models

NOT Gate DC Transfer

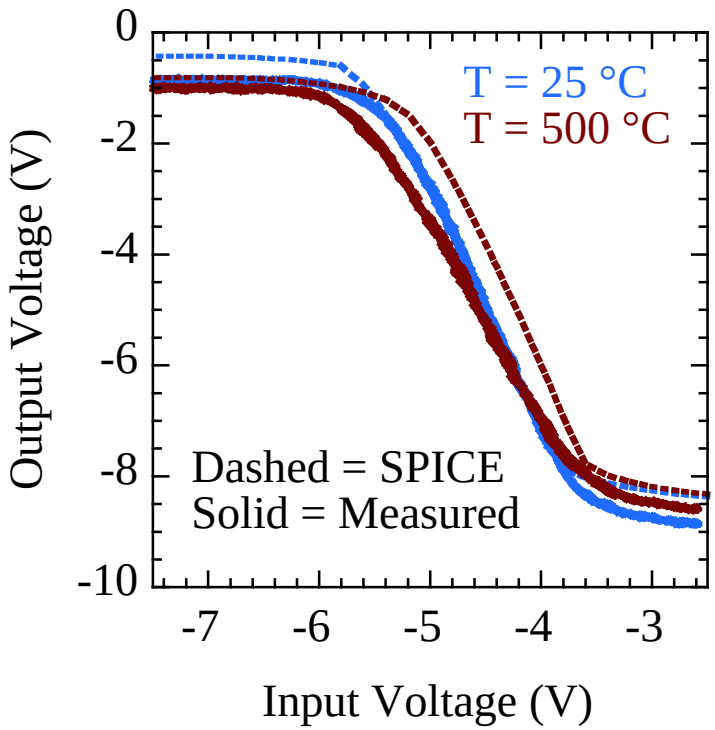

Inverting Amplifier Gain-Frequency

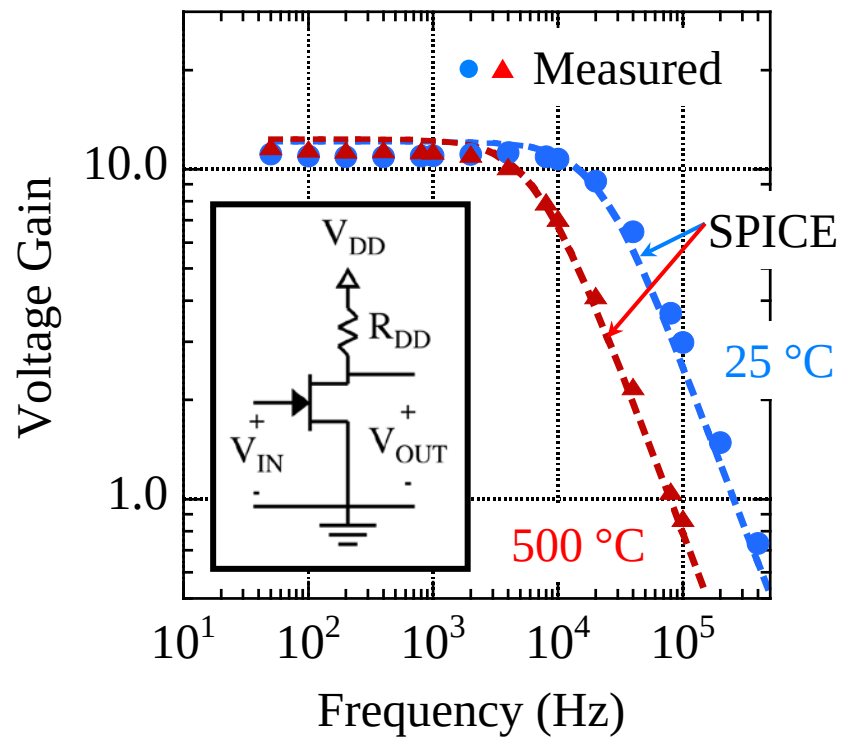

Cold-Temperature Operation of SiC IC's

"High Temperature" IC's still function at cold temperatures down to -125 ° C!

NOR Gate Test Waveforms

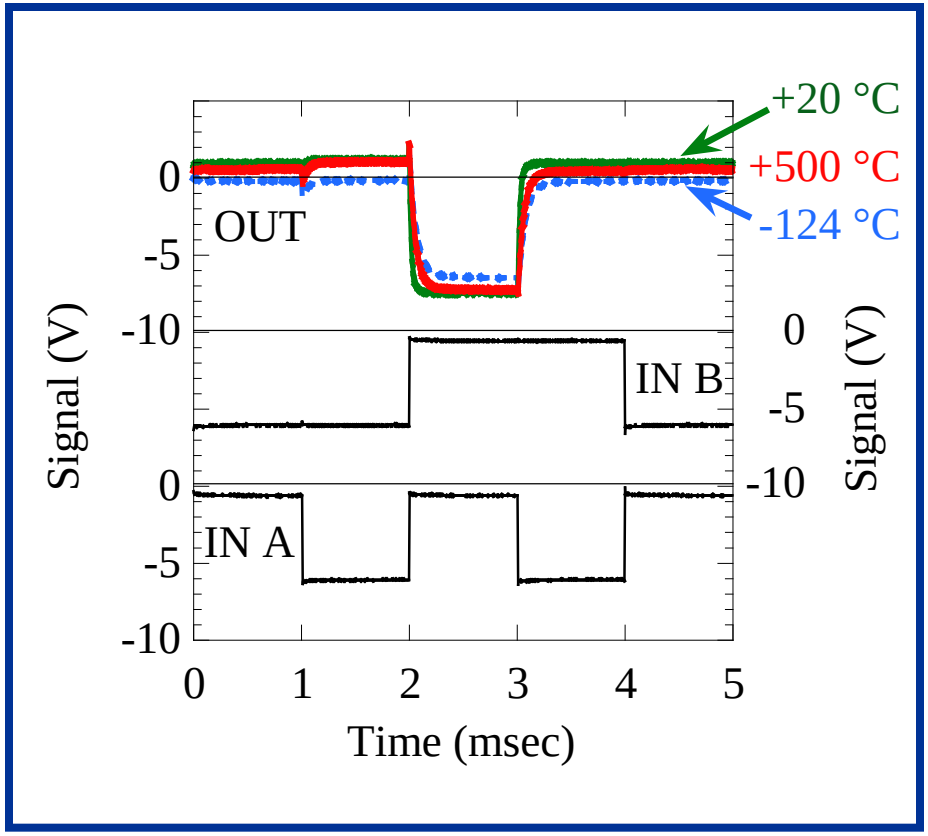

Ring Oscillator Test Waveforms

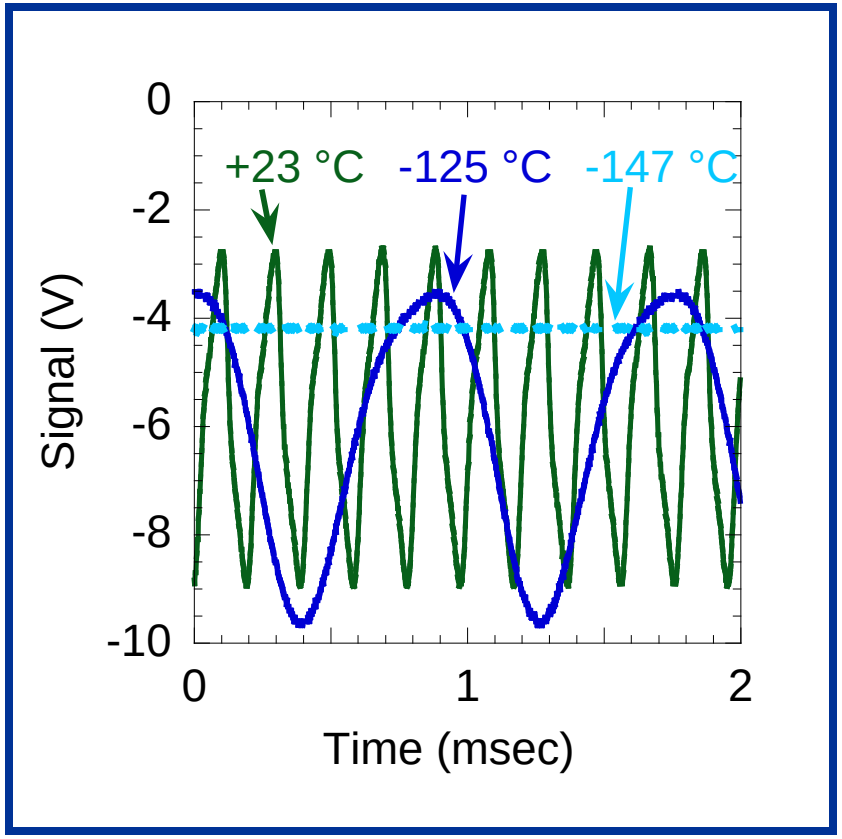

Broadest temperature range ever reported for transistor IC's.

- NO change to circuit input voltages, output voltages change little.
- Main performance change vs. temperature is circuit speed/frequency.

Next Steps

Testing and failure analysis of existing chips

- More chips, more time, more temperature (-150 °C to 600 °C)
- Thermal cycling, vibration
- Engine ground tests and flight tests

Further Technology development

- Shrink feature sizes and logic gate power dissipation.
- Improve interconnect materials
- Implement two-level interconnects
- Customize circuit design tools, application optimize circuits
- Implement much more complicated integrated circuits
    - Next process run features > 100 transistor circuits

Transfer technology for commercial manufacture

- Assist development of SiC high temperature ASIC foundry
    (ASIC = Applications Specific Integrated Circuit)

Summary

NASA has pioneered revolutionary durable 500 °C integrated circuits.
New technology foundation -- new applications!

- Enabled by fundamental electronic materials research.
- Simple amplifiers and logic gates working a long time at 500 °C.
- Approach is rapidly up-scalable to high circuit complexity while remaining physically small.

Further development should lead to beneficial technology insertion.

- IC's for engines (especially new wireless health monitoring).
- Technology transfer and commercialization.
- Additional applications (automotive, well-drilling, **Venus**).