NASA's Combustion Test Capabilities

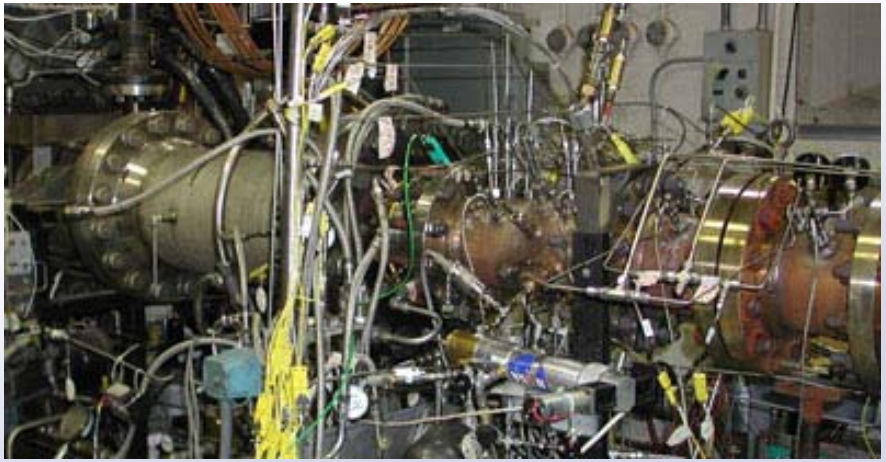

John DeLaat (for Clarence Chang)
Combustion Branch
Ph: (216) 433-8561
email: Clarence.T.Chang@nasa.gov

CE5B and ASCR Combustor Facilities`

Facility	Test emphasis	Max. pressure, psig	Max. airflow, lb/sec	Nonvitiated heated air, ˚F	Max. exhaust temp., ˚F
CE–5B	Sector	60 to 275	2 to 12	500 to 1350	3200
CE–5B–2	Flametube	60 to 400	0.6 to 5	500 to 1350	3200
ASCR Leg 1	Sector	50 to 900	3 to 50	500 to 1200	3400
ASCR Leg 2	Flametube	50 to 900	1 to 10	500 to 1200	3400

CE5B Stand 1

Newer – Dynamics testing

Newest – Alternate Fuels

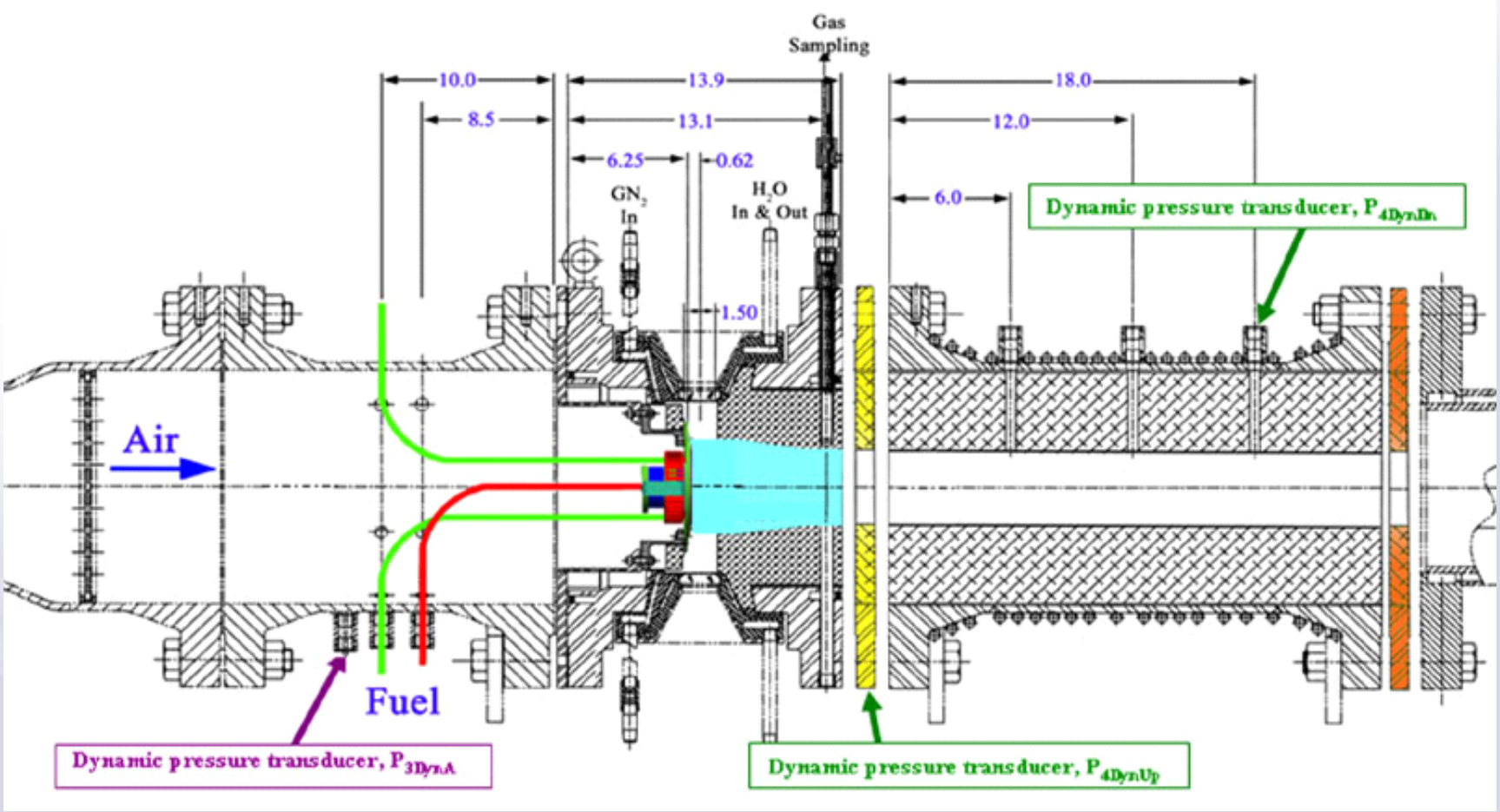

CE5B Stand 1

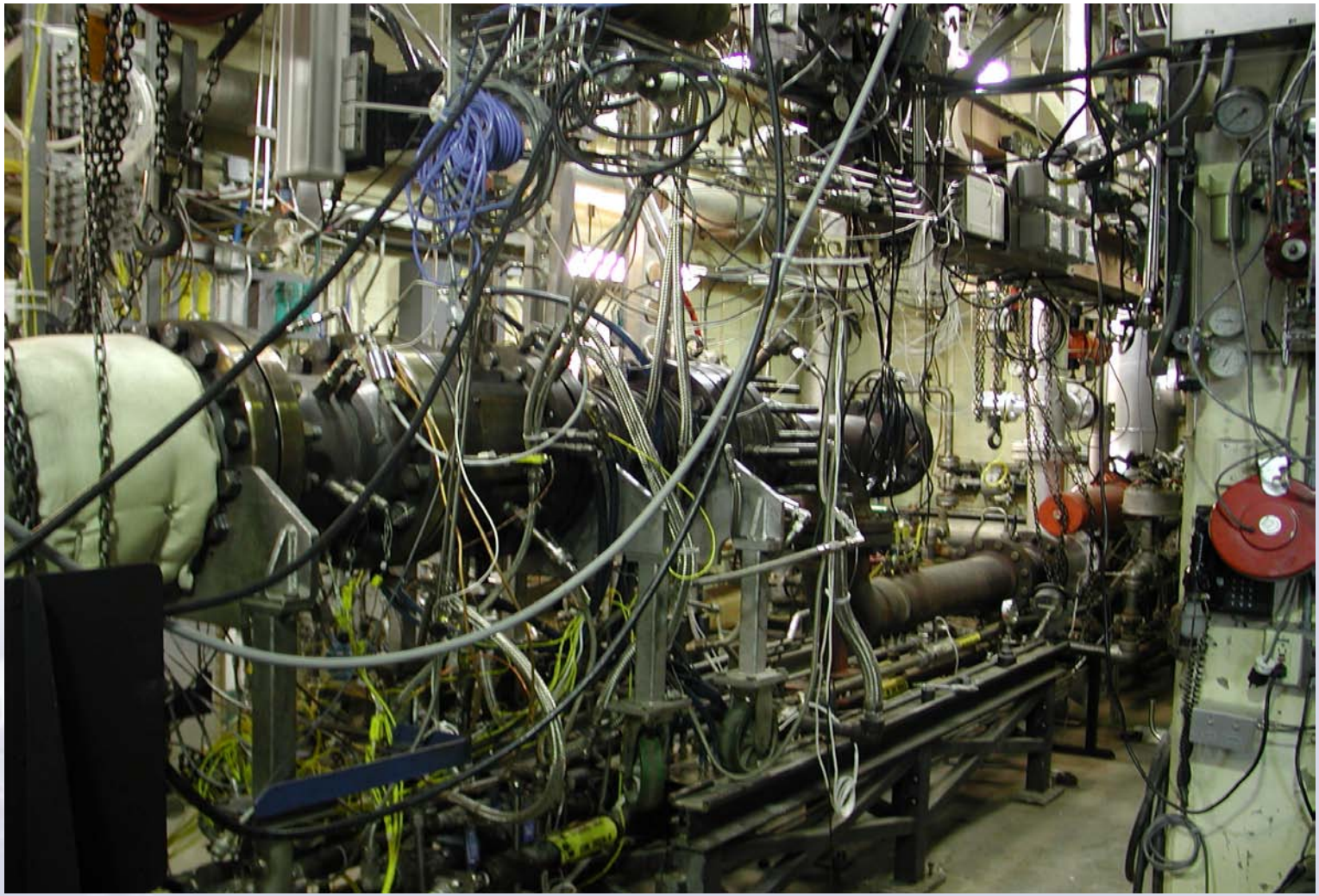

ADVANCED SUBSONIC COMBUSTION RIG

60 ATMOSPHERE COMBUSTION RIG

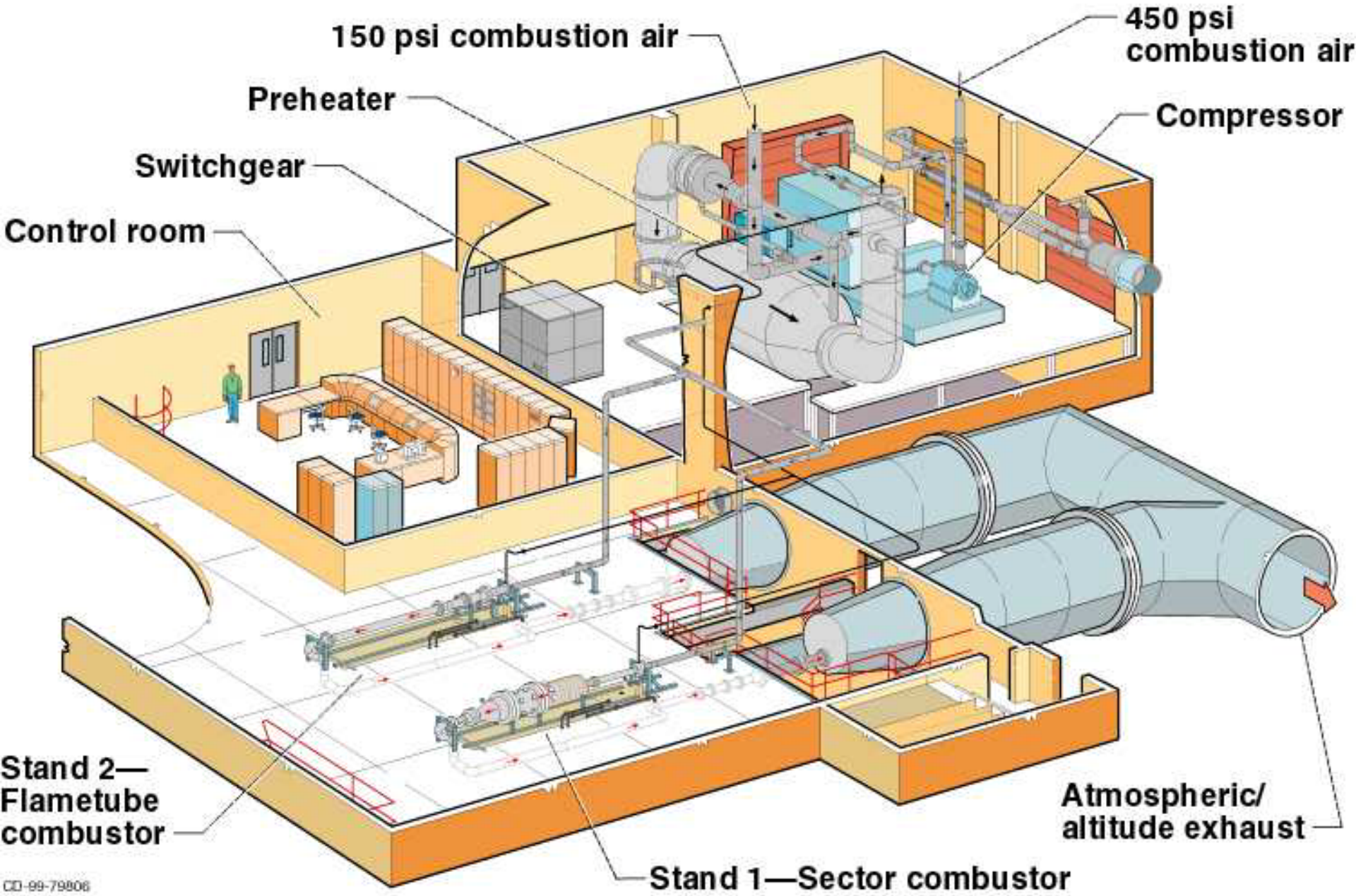

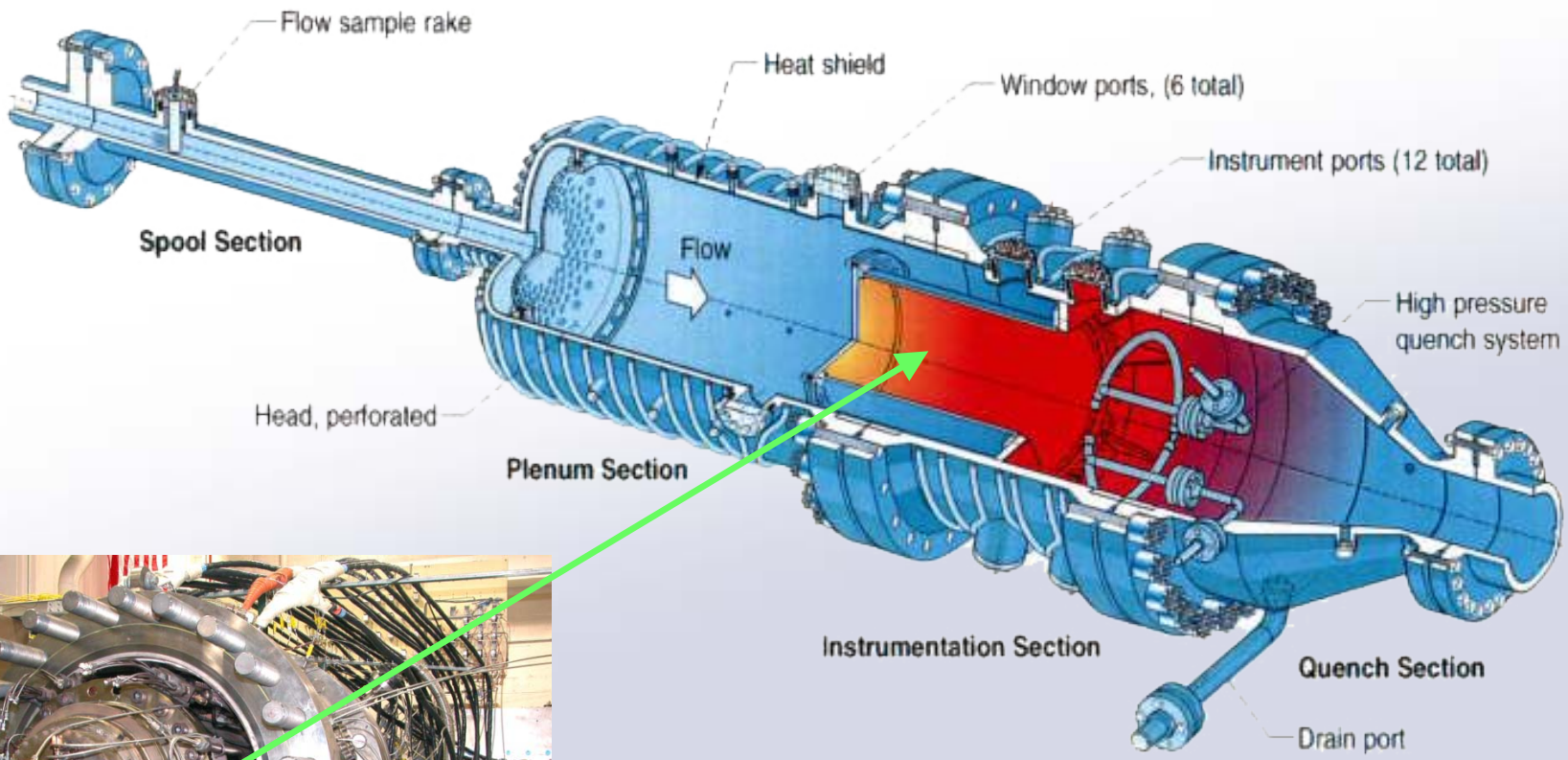
Flow sample rake
Heat shield
Window ports, (6 total)
Instrument ports (12 total)
Spool Section
Flow
High pressure quench system
Head, perforated
Plenum Section
Instrumentation Section
Quench Section
Drain port

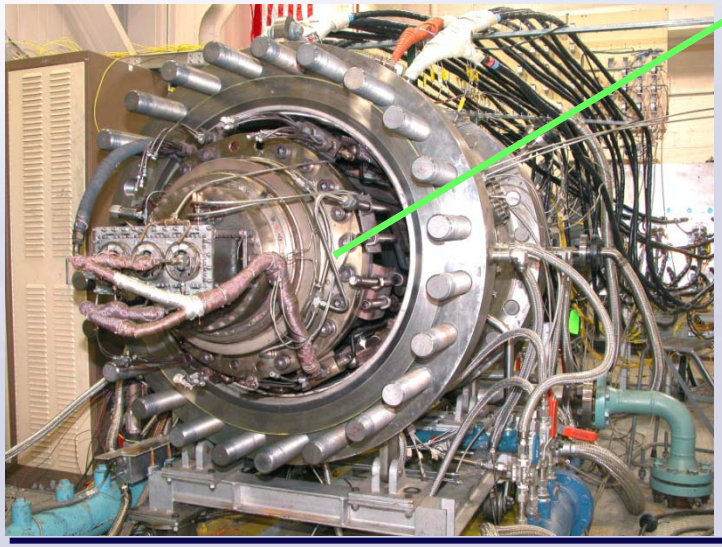

Program Connection

Fundamental Aeronautics

Subsonic Fixed Wing (SFW)

Supersonic Cruise Emissions reduction task (SUP)

Objective: Design and build 5-atm optically-accessible combustor rig to evaluate the effect of Lean Direct Injection (LDI) injector geometry, combustor system configuration, and fuel variation on flame-holding dynamics and pollutant formation. In addition, this facility will be used to research active combustion control to suppress instabilities as well as testing high temperature sensors

Operating Ranges:

Test Configuration	T3 [°F]	T4 [°F]	P3 [psia]	W air [lbm/s]	Wfuel [gpm]	Equiv. Ratio
Single-injector	70 - 1000	70 - 3550	15 - 75	0.8	0.04	0.3-0.6
7-injector array	70 - 1000	70 - 3550	15 - 75	0.8	0.28	0.3-0.6

CE-13C LDI Injector Screening Rig Functional Layout (laying on its side)

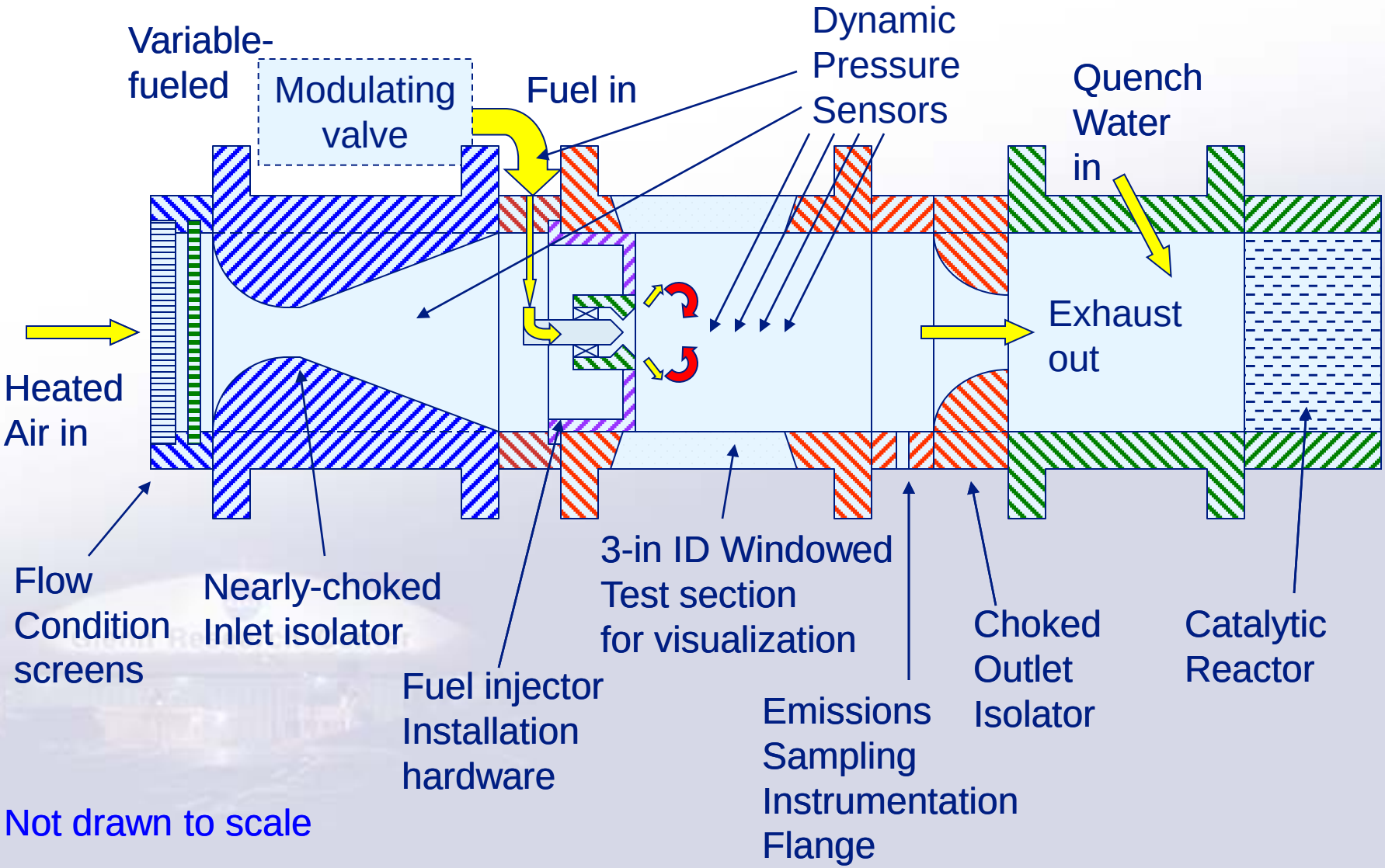

Not drawn to scale

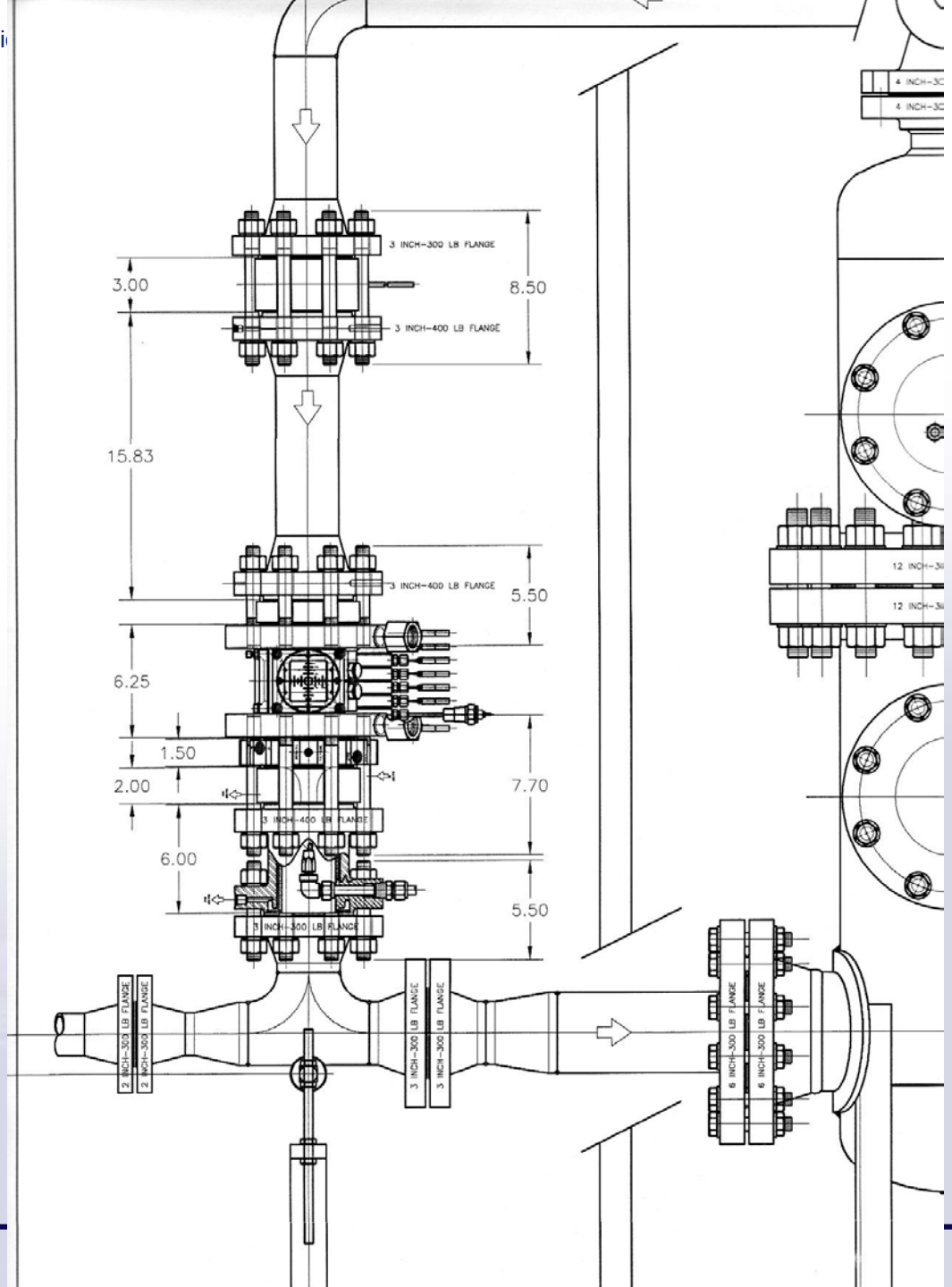

Low-Pressure LDI Screening Rig Dimensions

Example 7-point LDI Layout Research Interests

Single element configurations
- Swirl numbers, radial vs. axial
- Venturi contraction
- Downstream recirculation zones
- Laminate and machined assembly
- SiC fabrication

Multi-element interactions

Recessed Pilot

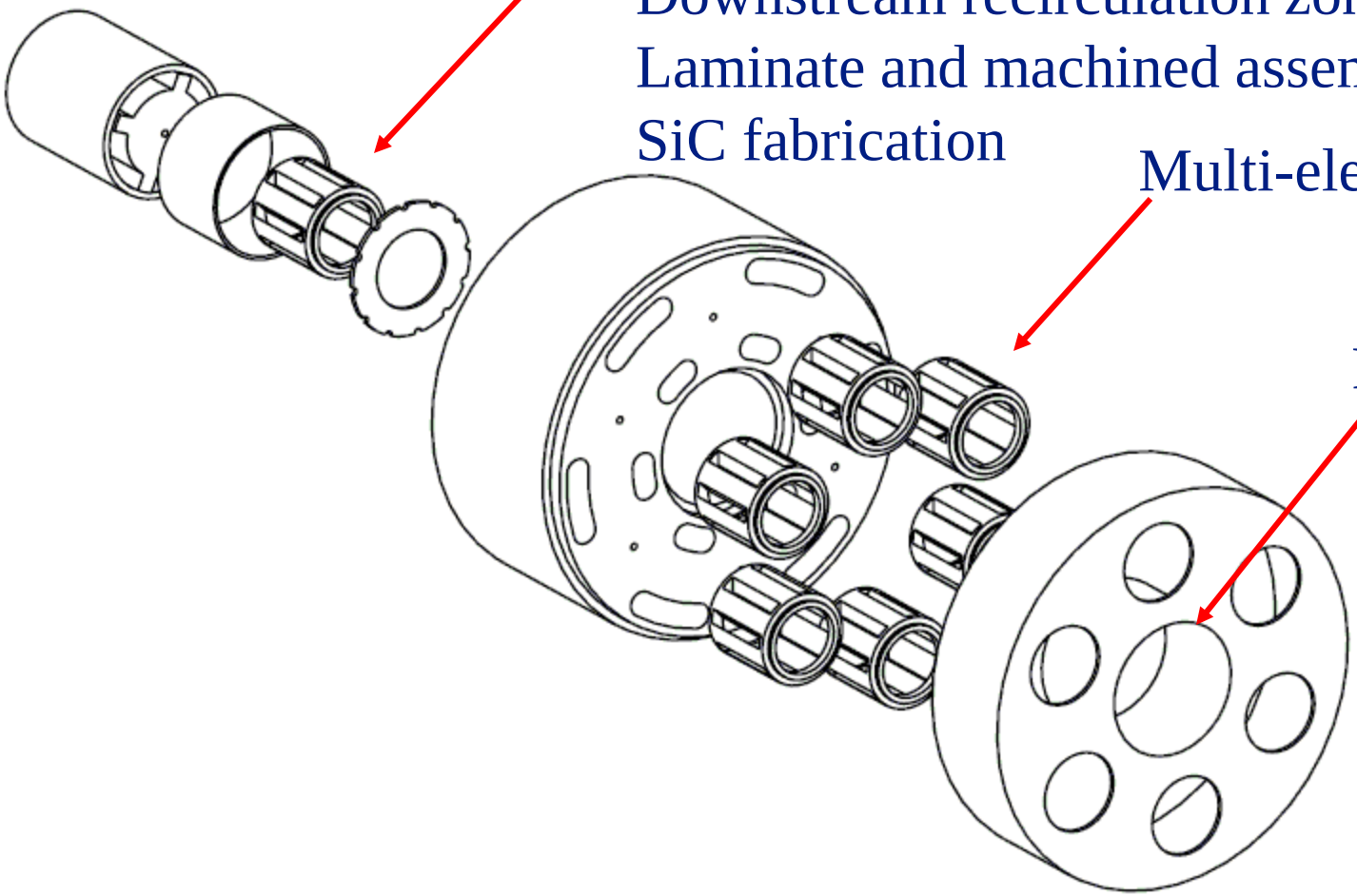

Single-nozzle LDI component assembly

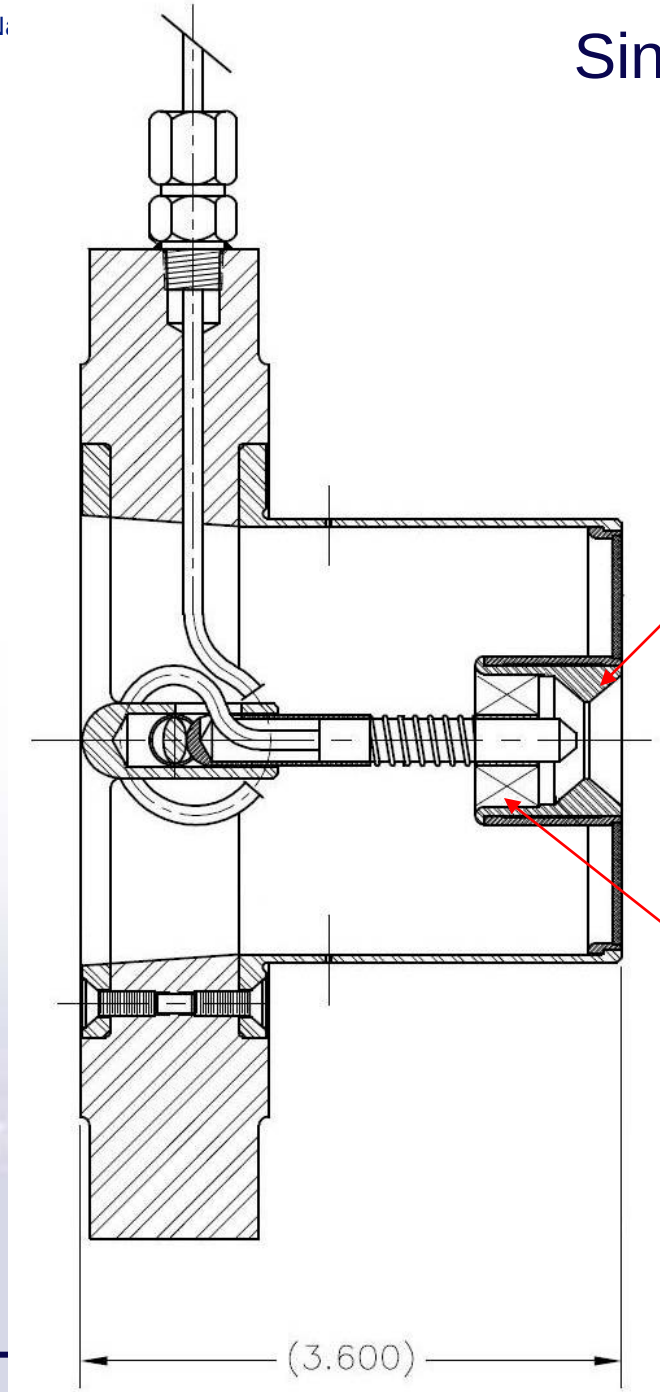

Questions?