Ii Ii

in

Draw a line to where the passengers, luggage, and engine go **in**to the airplane.

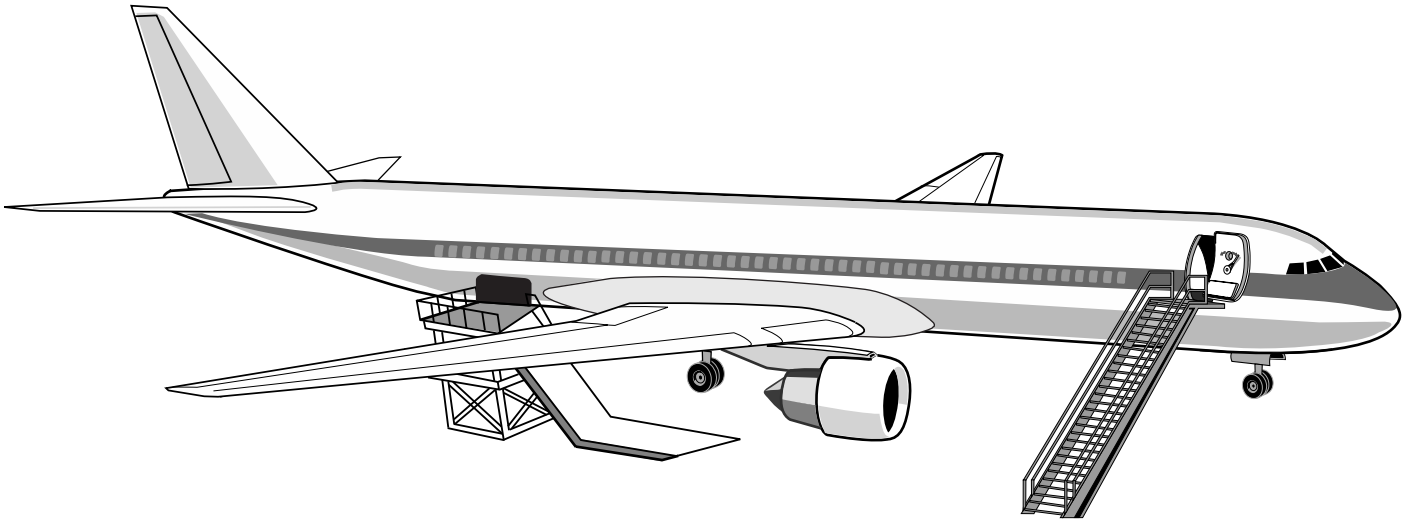

passengers

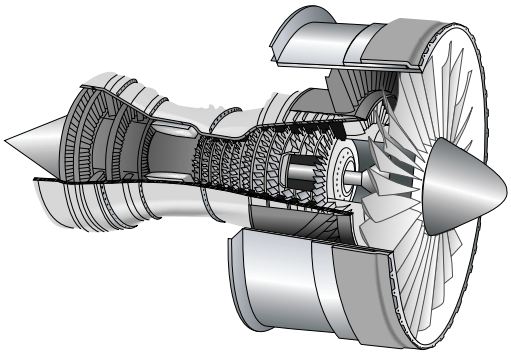

engine

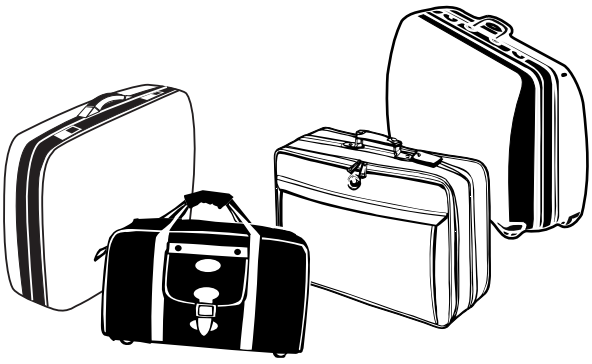

luggage