6.16 Example P: Non-Symmetric Laminate

Sample Input File For Non-Symmetric Laminate Problem

The following example is used to explain the use of monolithic layer in more detail.

Problem Summary:

Load Type: Thermomechanical

Load Component: 11-direction (applied mid-plane strain)

Load History: Monotonic

Load Control: Strain

Load History Data: Cool-down from 371.1^{o}C to 21.1 ^{o}C then hold temperature constant during mechanical loading

$\dot{T} = 35.$ ^{o}C/sec

$\dot{\varepsilon} = 1.x10^{-3}$/sec, $\varepsilon_{max} = 0.01$,

$\varepsilon_{min} = 0.$

$\Delta t_{thermal} = 0.05$ sec, $\Delta t_{mech} = 0.01$ sec

Micromechanics model: Laminate Option

Laminate Details:

Layer	Thickness (mm)	Fiber	Matrix	Fiber Volume Fraction	Unit Cell	Packing Arrangement	Angle
1	1	mono-lithic	Aluminum (2024-T4)	-	-	-	-
2	1	Graphite T-50	Aluminum (2024-T4)	30%	2x2 sub-cells	square	90
3	1	Graphite T-50	Aluminum (2024-T4)	30%	2x2 sub-cells	square	0

Integration Algorithm: Forward Euler

Constituent Material Model: Bodner-Partom

☞ **Note: The laminate analyzed in this example is shown in following figure. The macro output for the laminate option consists of stress resultants and mid-plane strains. The micro output is always in the local coordinates of the layer in question. Micro output is given for both integration points within the layer in question.**

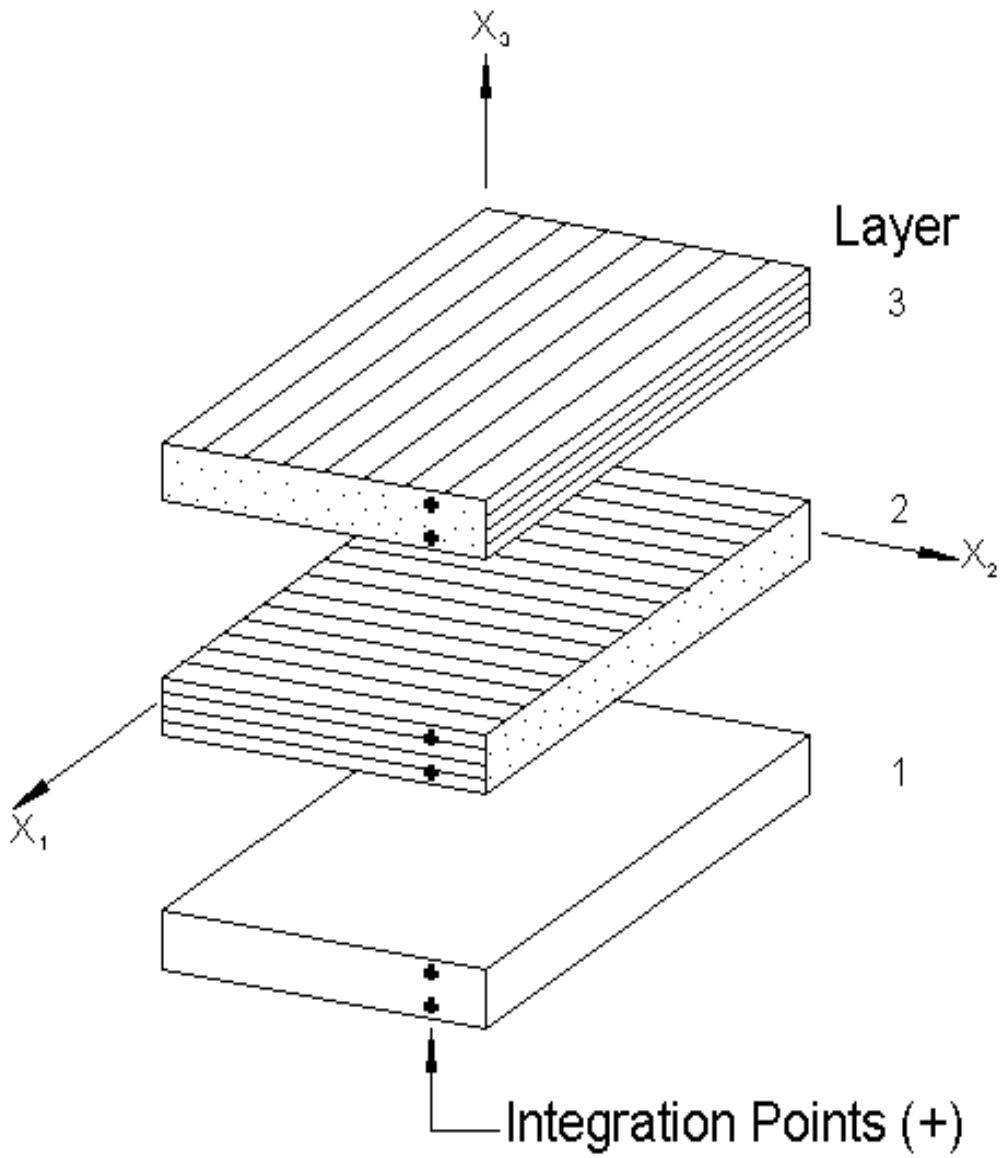

example of a non-symmetric laminate with monolithic and heterogeneous layers

```
*PRINT
  NPL=0 %
*LOAD
  LCON=3 LOP=1 LSS=1
*MECH
  NPTW=3 TI=0.0, 10.0, 20.0 LO=0.0, 0.0, 0.01
*THERM
  NPTT=3 TI=0.0, 10.0, 20.0  &
  TE=371.1, 21.1, 21.1 %
*MODEL
  MOD=3 MATSYS=2 NLY=3 THK=0.001,0.001,0.001 CON=1,2,2 &
  SYS=1,2,2 ANG=0.,90.,0. %
*SOLVER
  NTF=1 NPTS=3 TIM=0.0, 10.0, 20.0 STP=0.05, 0.01 %
*FIBER
  NFIBS=1
  NF=1 MS=2 MF=9 NDPT=2 MAT=A D=1.,0.,0.%
*MATRIX
  NMATX=1
  NM=1 MS=2 MM=1 NDPT=2 MAT=A %
*MONOL
  NMON=1
  NMO=1 MS=1 MMO=1 NDPT=2 MAT=A %
*MRVE
  IDP=0,1,1
  L=1
  L=2 VF=0.3
  L=3 VF=0.3 %
*CURVE
  NP=20 %
*MACRO
  NT=1
  NC=1 X=1 Y=7 NAM=lam-x %
*MICRO
  NT=3
  NC=1 LYR=1 X=37 Y=1 NAM=lam-x1
  NC=2 LYR=2 CELL=2 X=37 Y=2 NAM=lam-x2
  NC=3 LYR=3 CELL=2 X=37 Y=1 NAM=lam-x3 %
*END
```

The following figures were obtained from the macro and micro x-y plot data files produced by the present example.

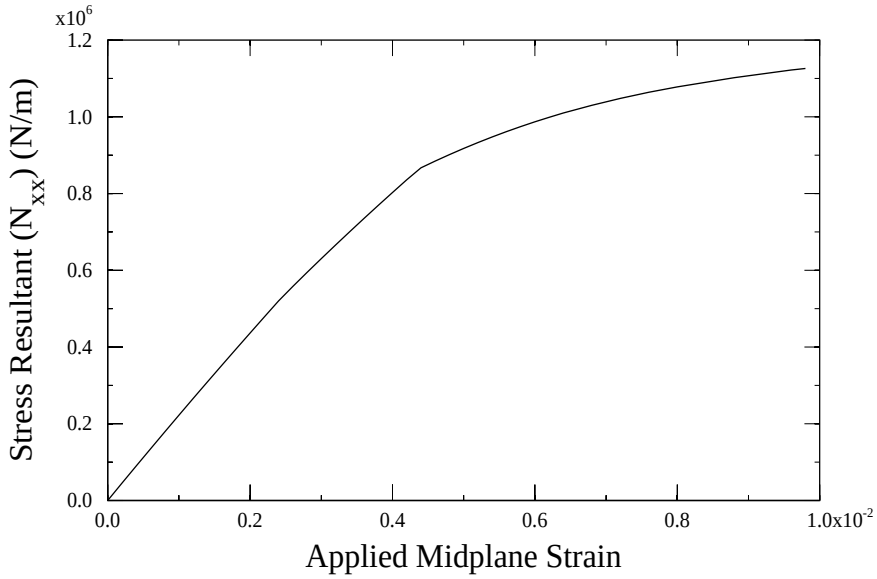

Global Level Results

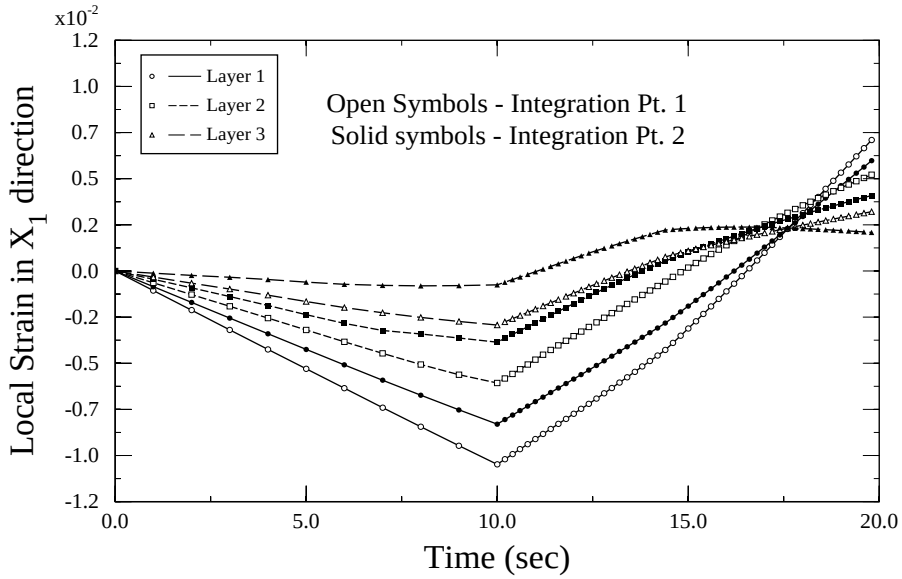

Local Level Results

☞ **Note: The increasing magnitude of the strain towards the lower surface of the laminate is due to the increased bending resulting from the nonsymmetric lay-up.**