Donald M. Curry
National Aeronautics and Space Administration
Johnson Space Center
Houston, Texas

X -38 TPS Seal Status

Donald M. Curry
NASA Johnson Space Center

1999 NASA Seal/Secondary Air System Workshop
NASA Glenn Research Center
October 28-29, 1999

X38 - Crew Return Vehicle

- **An element of the International Space Station (ISS)**

- **Three Scenarios**
  - ISS catastrophe
  - Emergency medical evacuation
  - Period of Space Shuttle unavailability

- **X-38 Program Purpose:**
  - To greatly reduce the costs and schedule for the development of Crew Return Vehicles (CRV's) and Crew Transfer Vehicles (CTV's) through the use of the rapid development methodology associated with an X-project
    - **Ground Testing**
    - **Atmospheric Testing**
    - **Space Flight Testing**

X-38 TPS Configuration

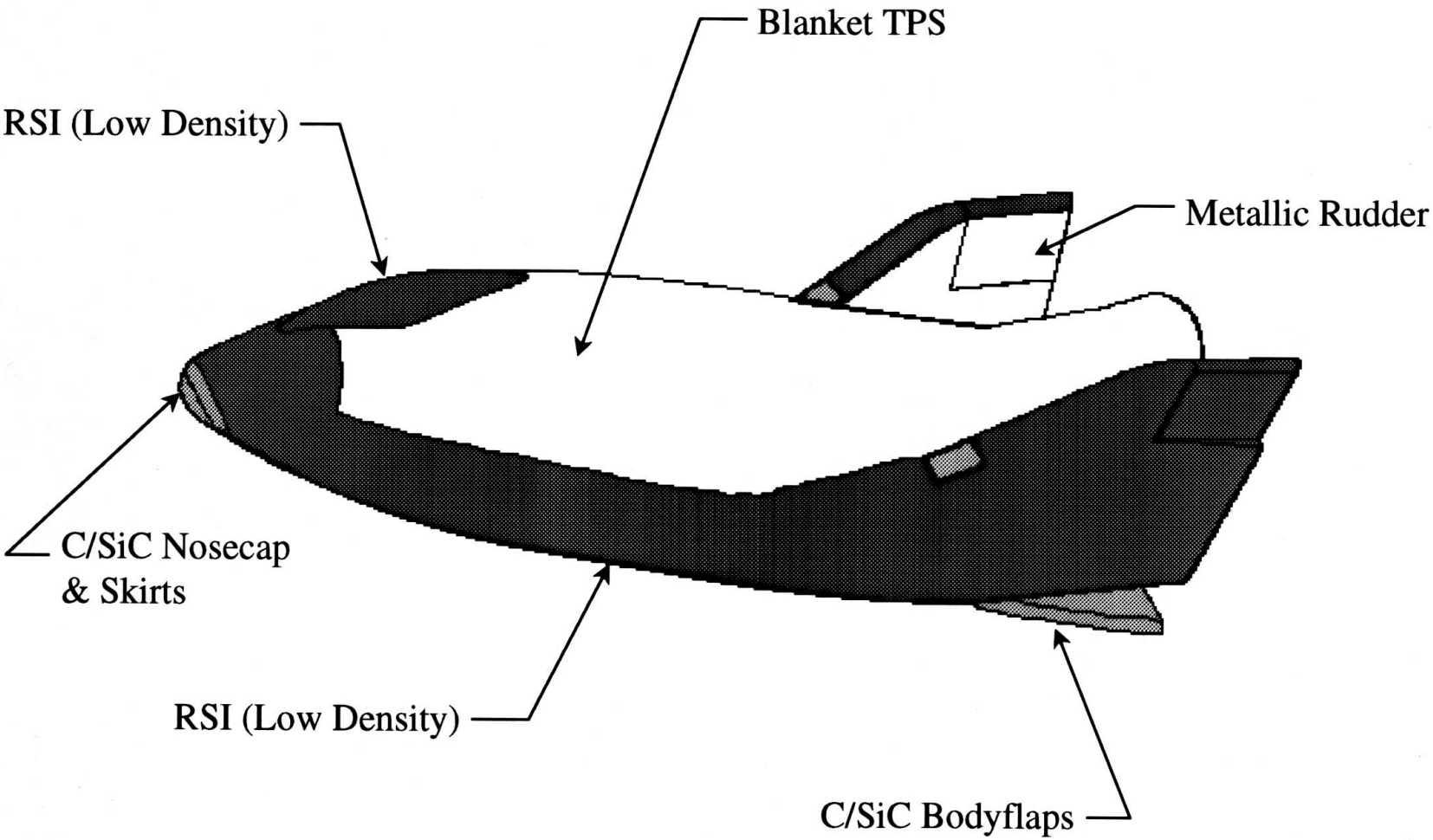

X38 - TPS Seals

General Seal Requirements

1) Single Flight Capability
2) High Temperature, Oxidative Environment
3) Combined Convective and Radiation Heating
4) Different Thermal Expansion of Seal Parts
5) Mechanical Load Plus Vibration/acoustic Loads
6) Component Movement and Rotation
7) Wear Resistant
8) Low Pressure Environment (at Peak Heating)
9) Low Permeability to Minimize Leakage

Specific X -38 Design Considerations

1) Use a Seal With Flight Heritage (Orbiter)
2) Operational Temperature - 1500 - 3000°F
3) Permeability - $1x10^{-10}$ - $1x10^{-11}$ Sq. M
4) Coefficient of Friction - 1.09 - 1.17
5) Installation Force Limit of 3 LB/in (Installed With 20-30% Seal Deflection)
6) Differential Pressures of 350 - 450 PSF During Peak Heating

Fin & Rudder Seals

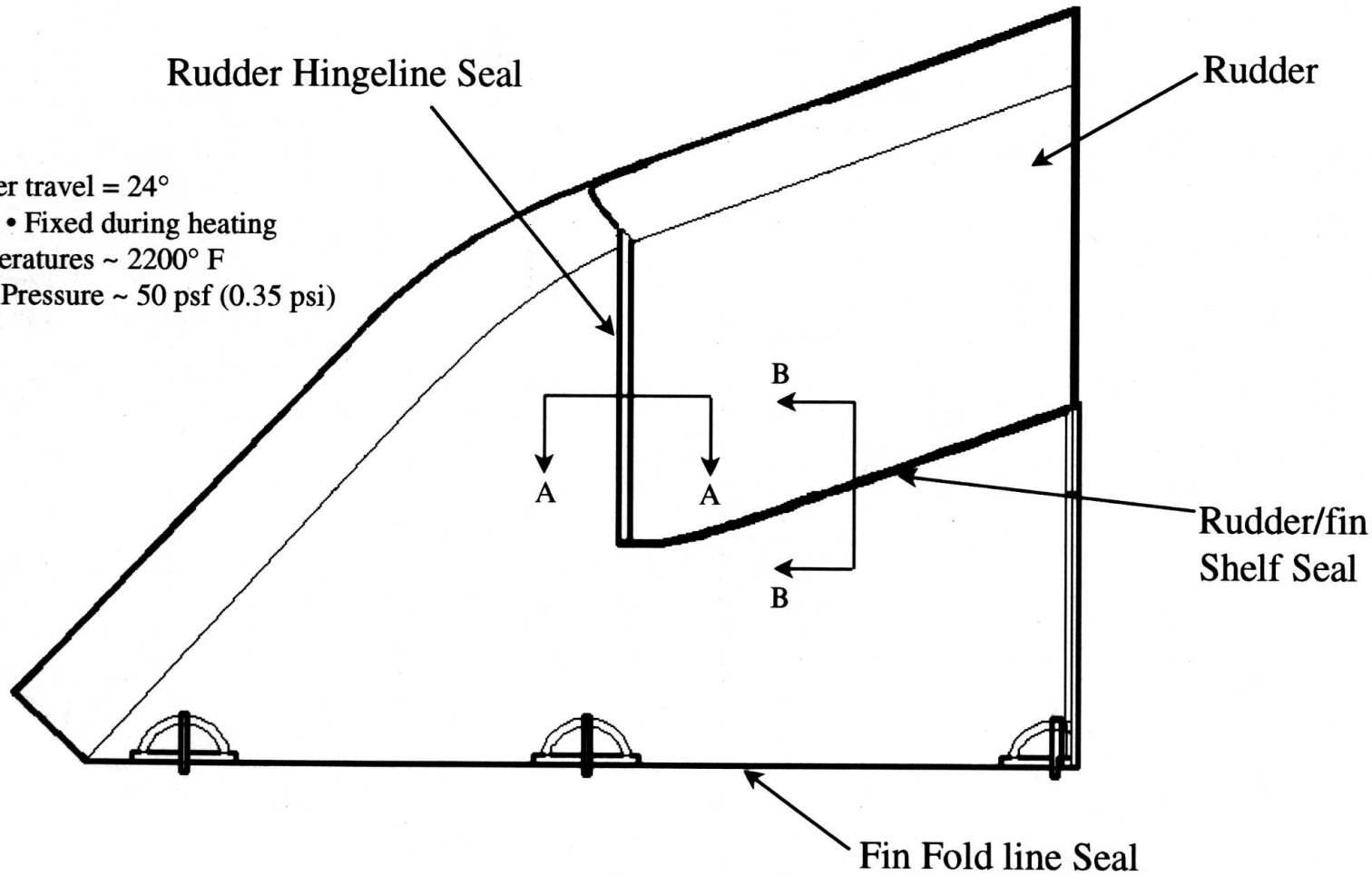

Rudder - Fin Structure Seal Routing

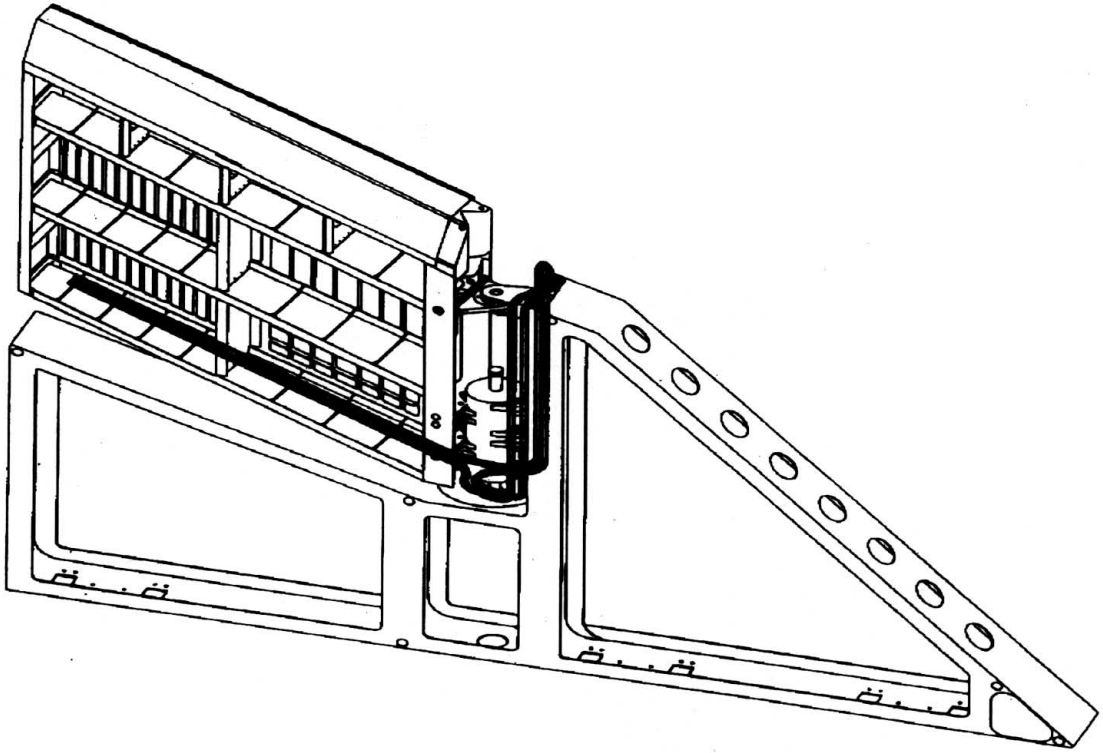

Fin/Rudder Seal

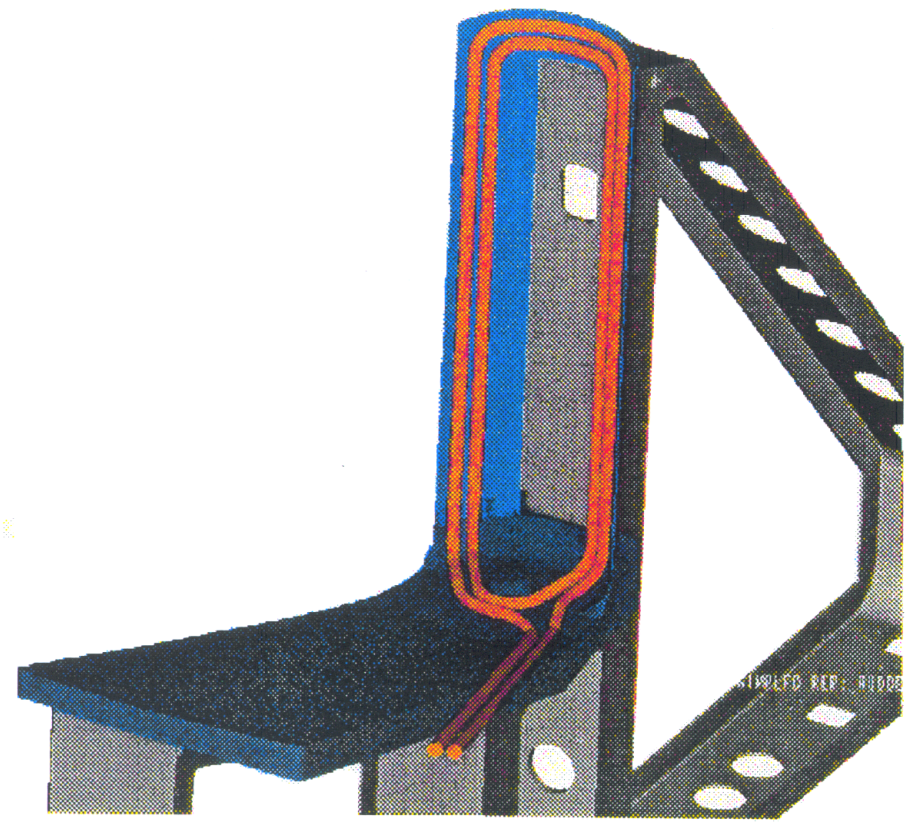

Rudder/Fin Shelf Seal

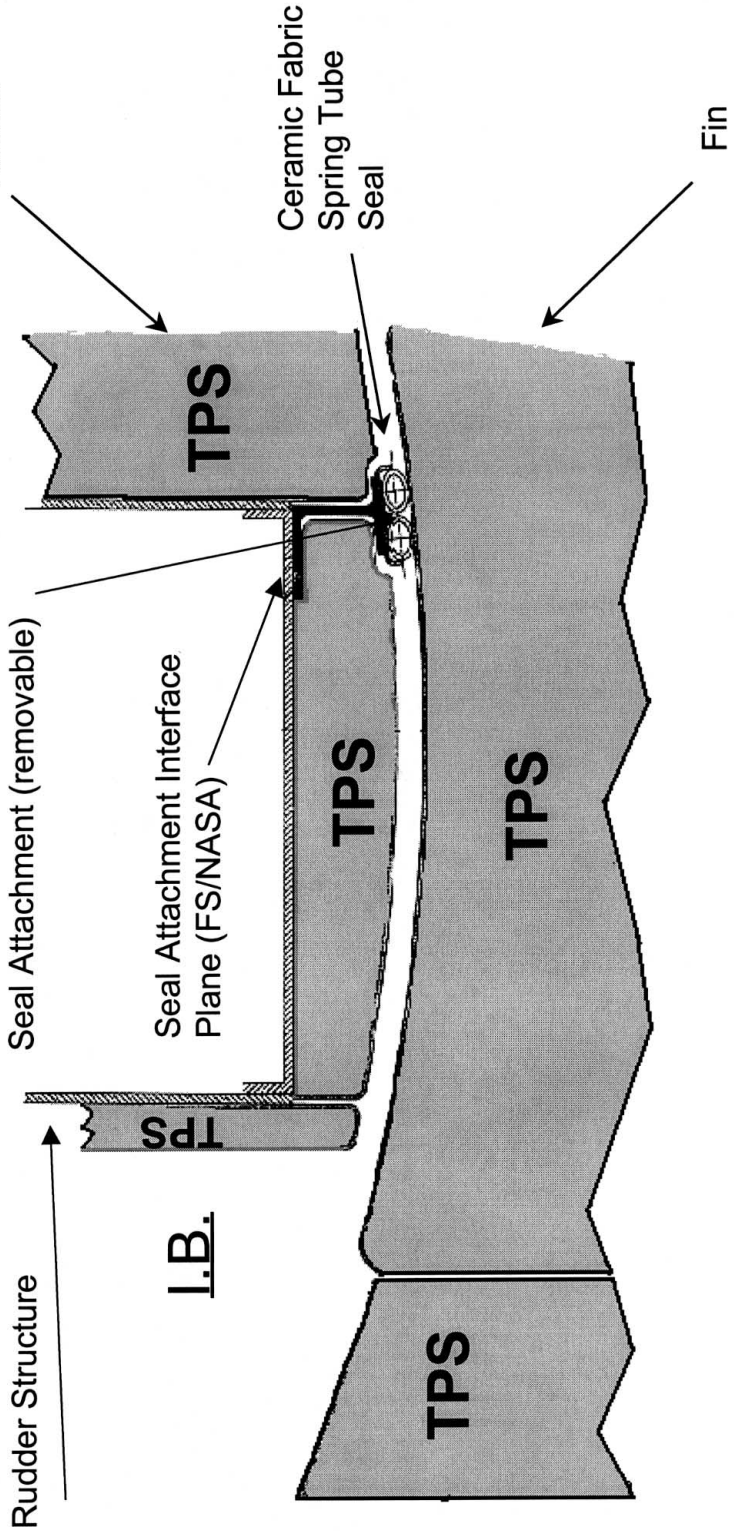

Section B-B

X-38 TYPICAL SPRING TUBE SEAL

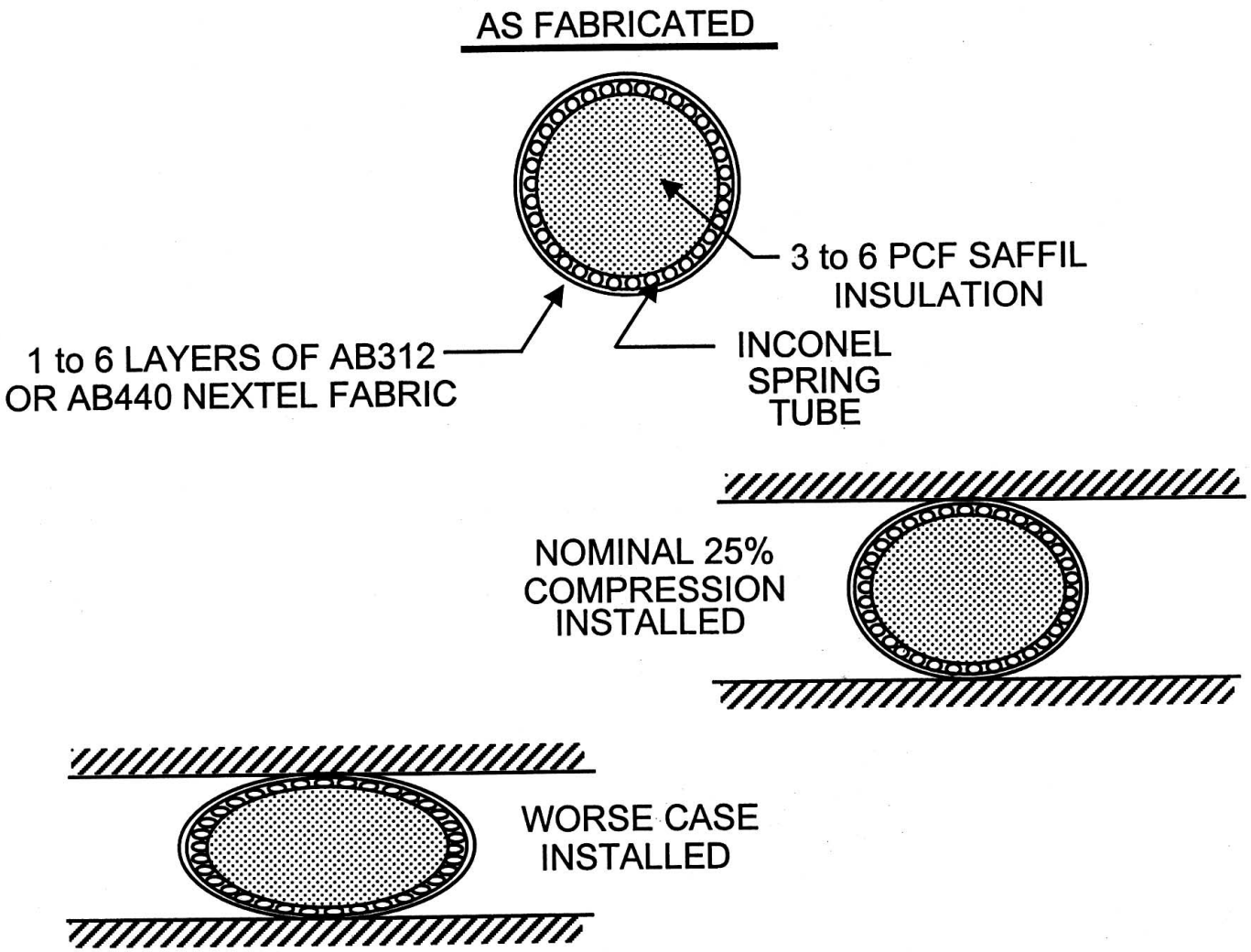

10/22/99

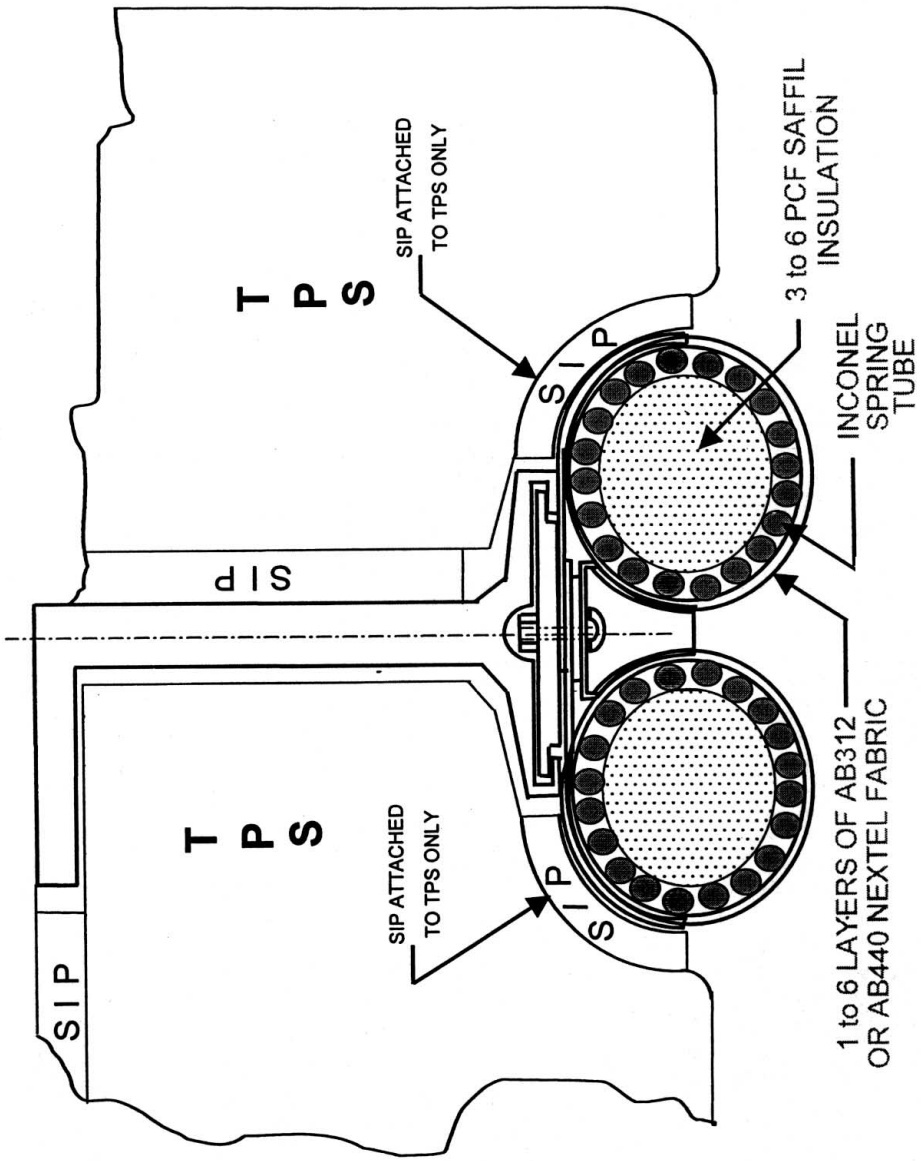
SIP
T P S
SIP ATTACHED TO TPS ONLY
SIP
SIP
T P S
SIP ATTACHED TO TPS ONLY
SIP
1 to 6 LAYERS OF AB312 OR AB440 NEXTEL FABRIC
INCONEL SPRING TUBE
3 to 6 PCF SAFFIL INSULATION

10/22/99

Rudder Hingeline Seal

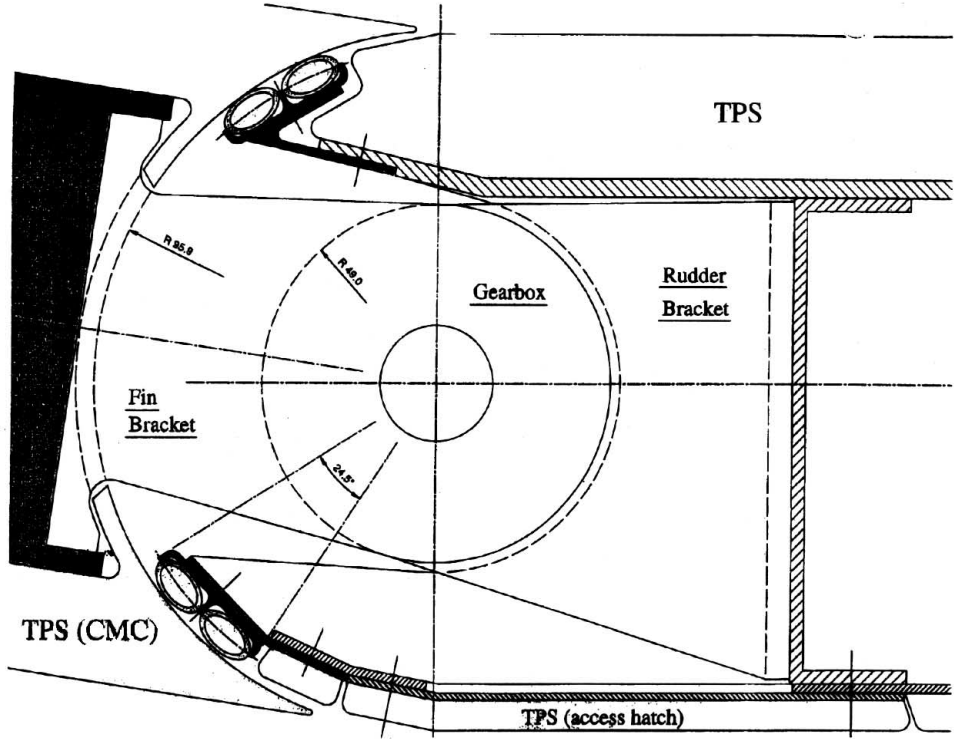

Section A-A

Folding Fin

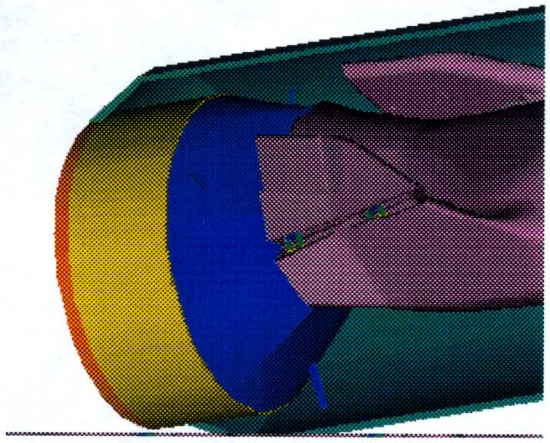

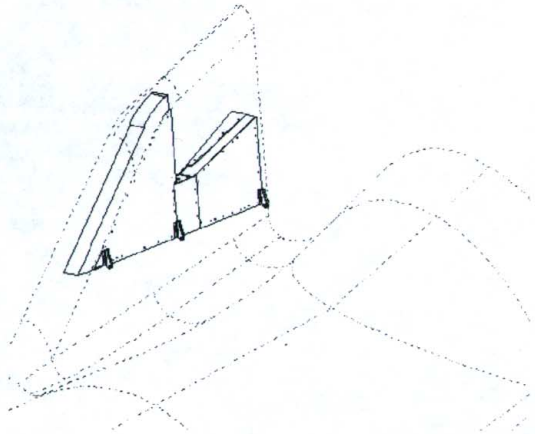

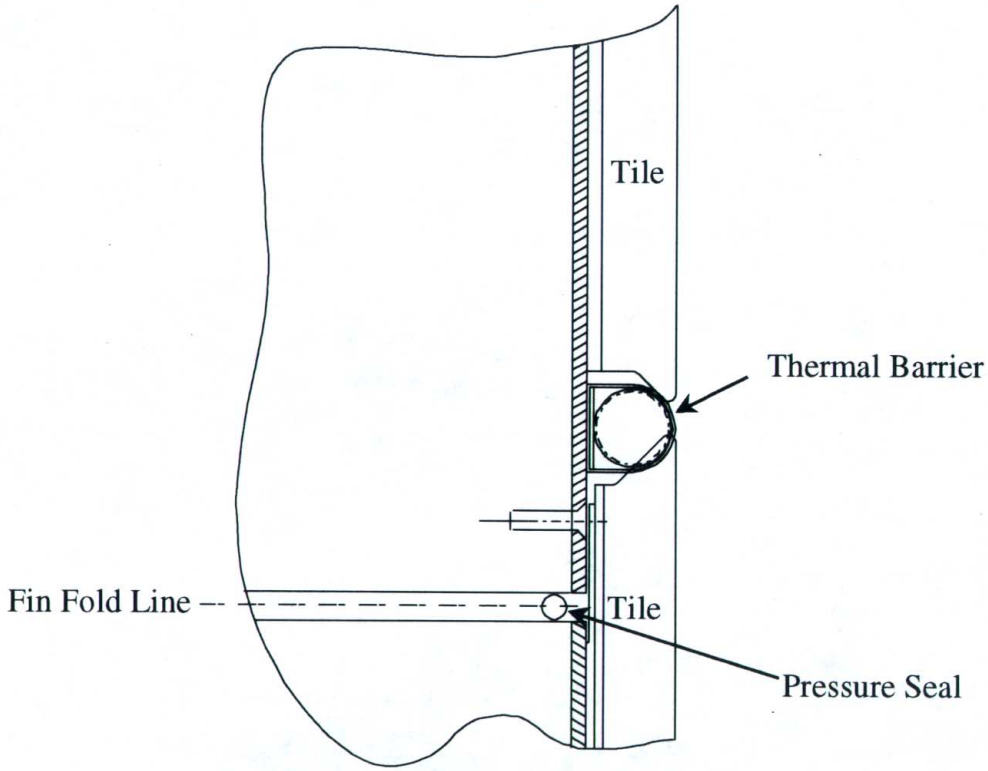

Bodyflap Configuration

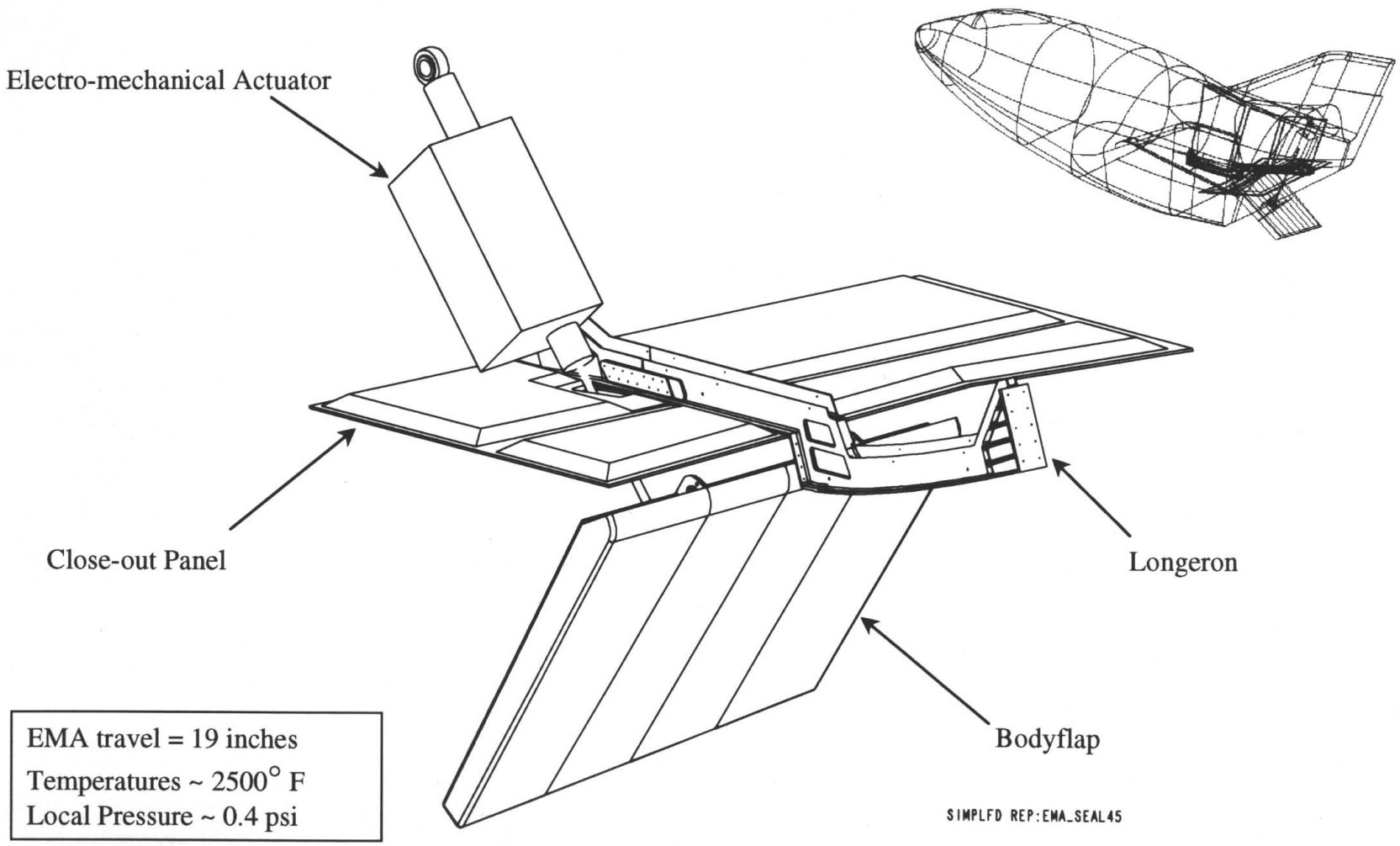

EMA travel = 19 inches
Temperatures ~ 2500° F
Local Pressure ~ 0.4 psi

X - 38 Bodyflap

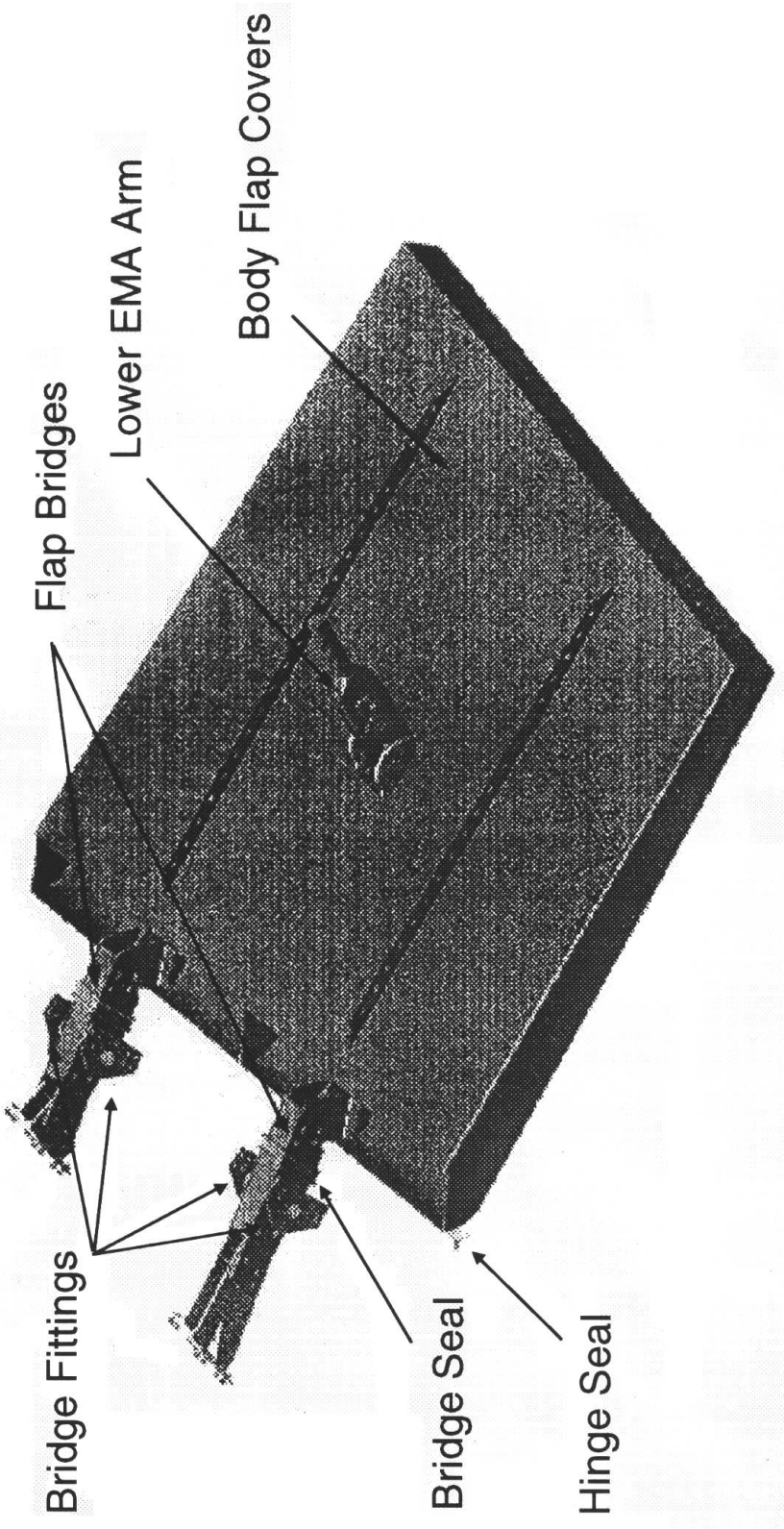

Body Flap Hinge Line Seal

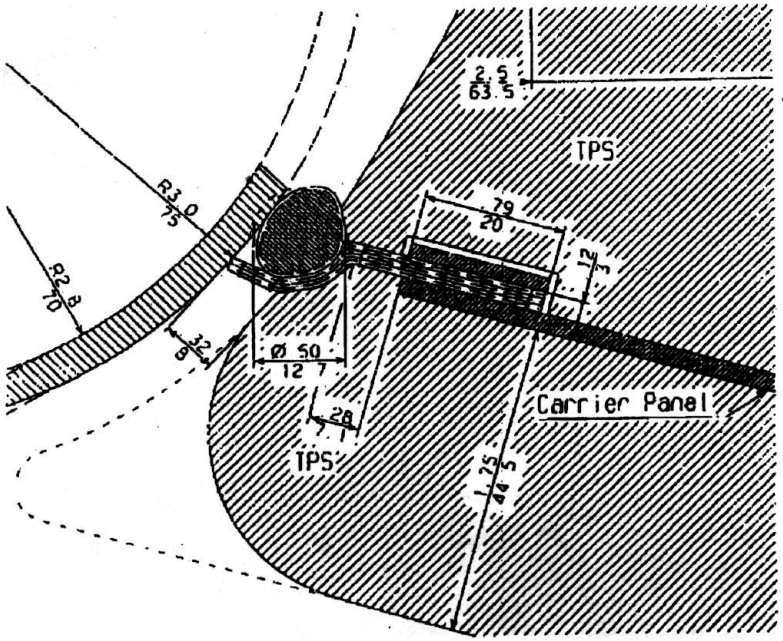

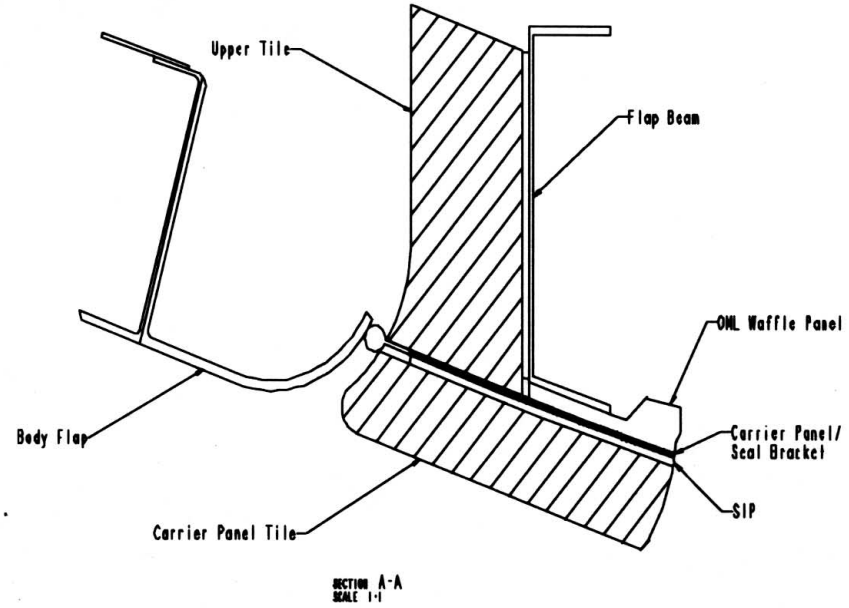

Bodyflap - Undeflected

Stowed Position

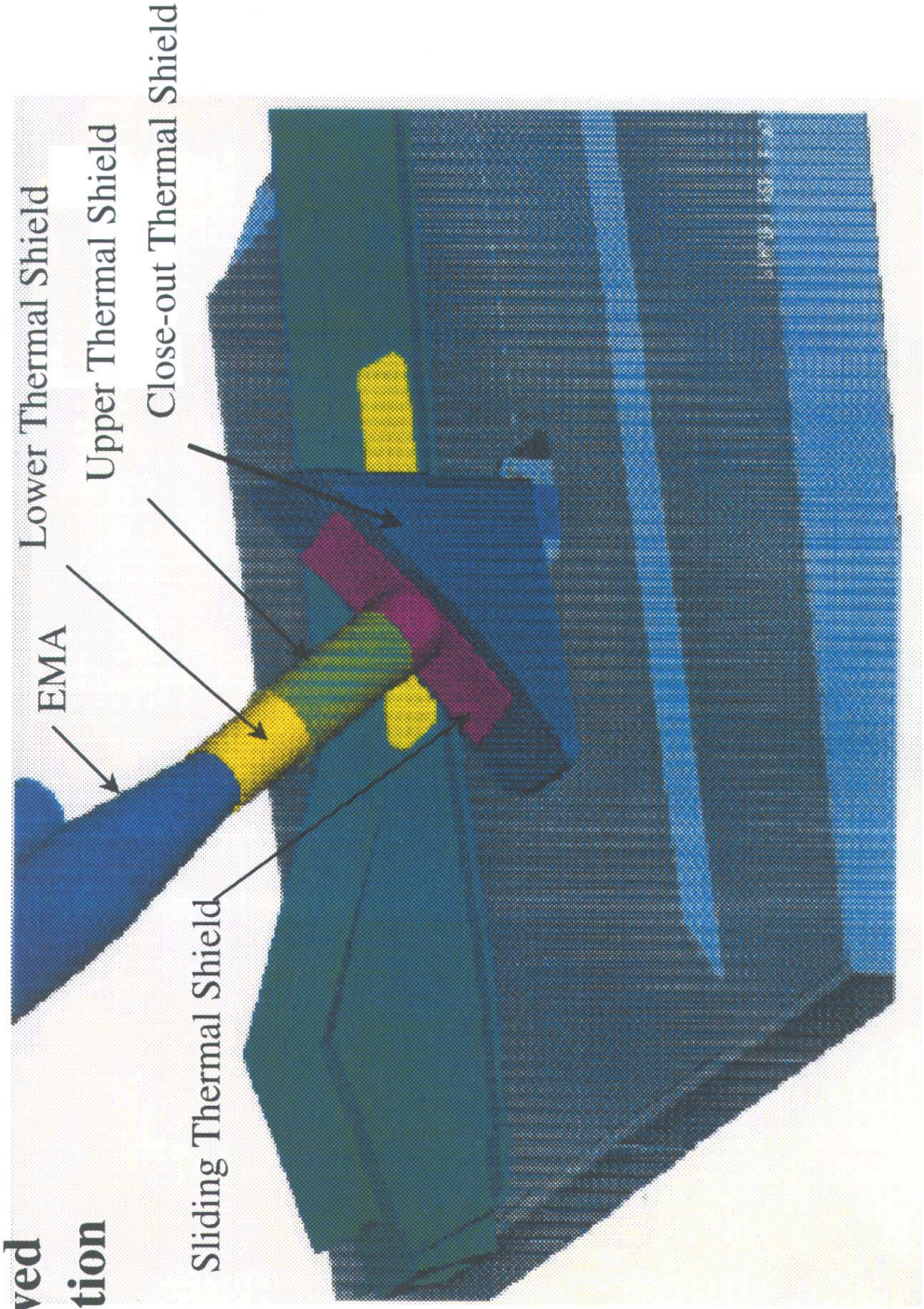

Body Flap - Full Deflection

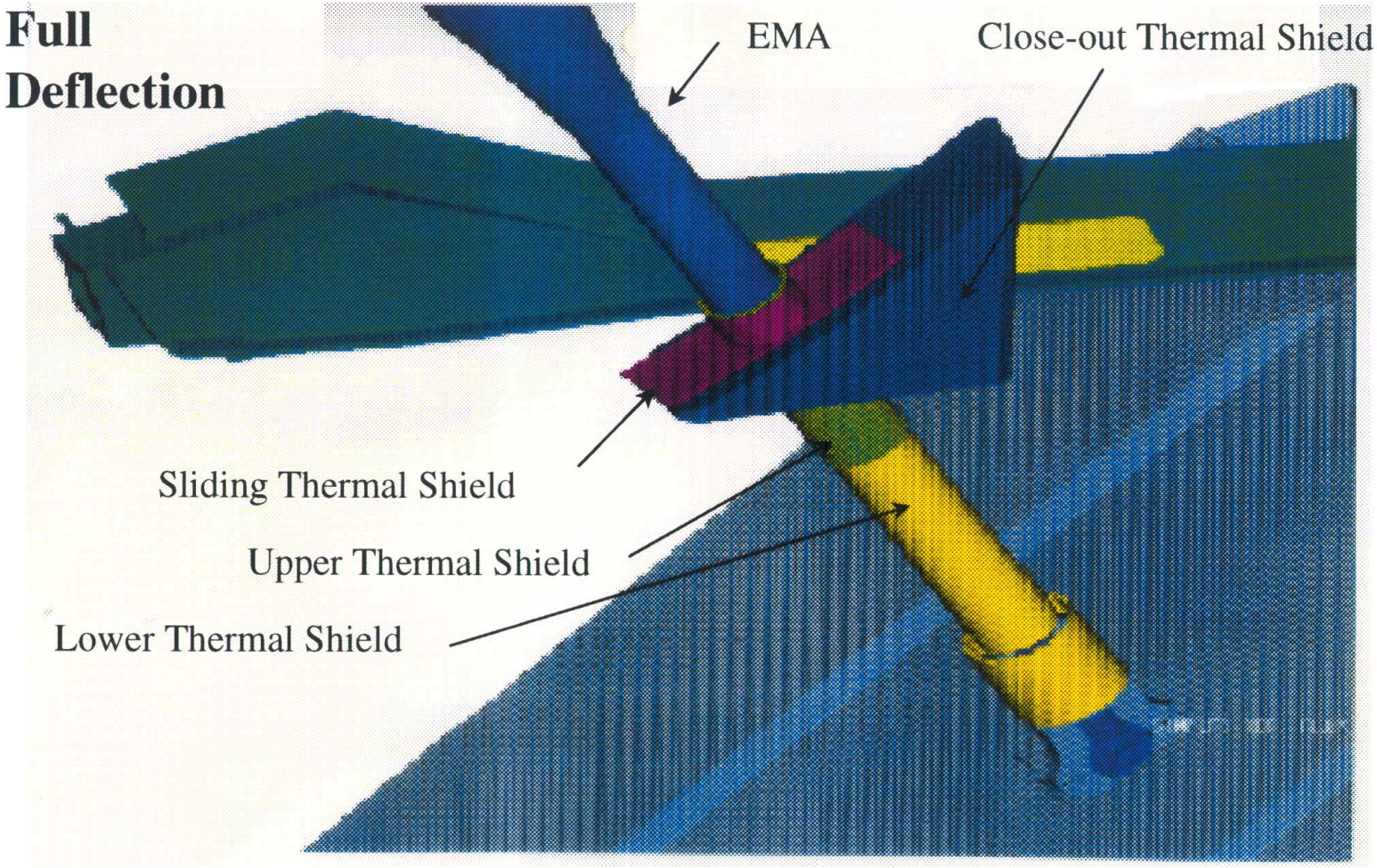

Body Flap Bridge Beam Seal

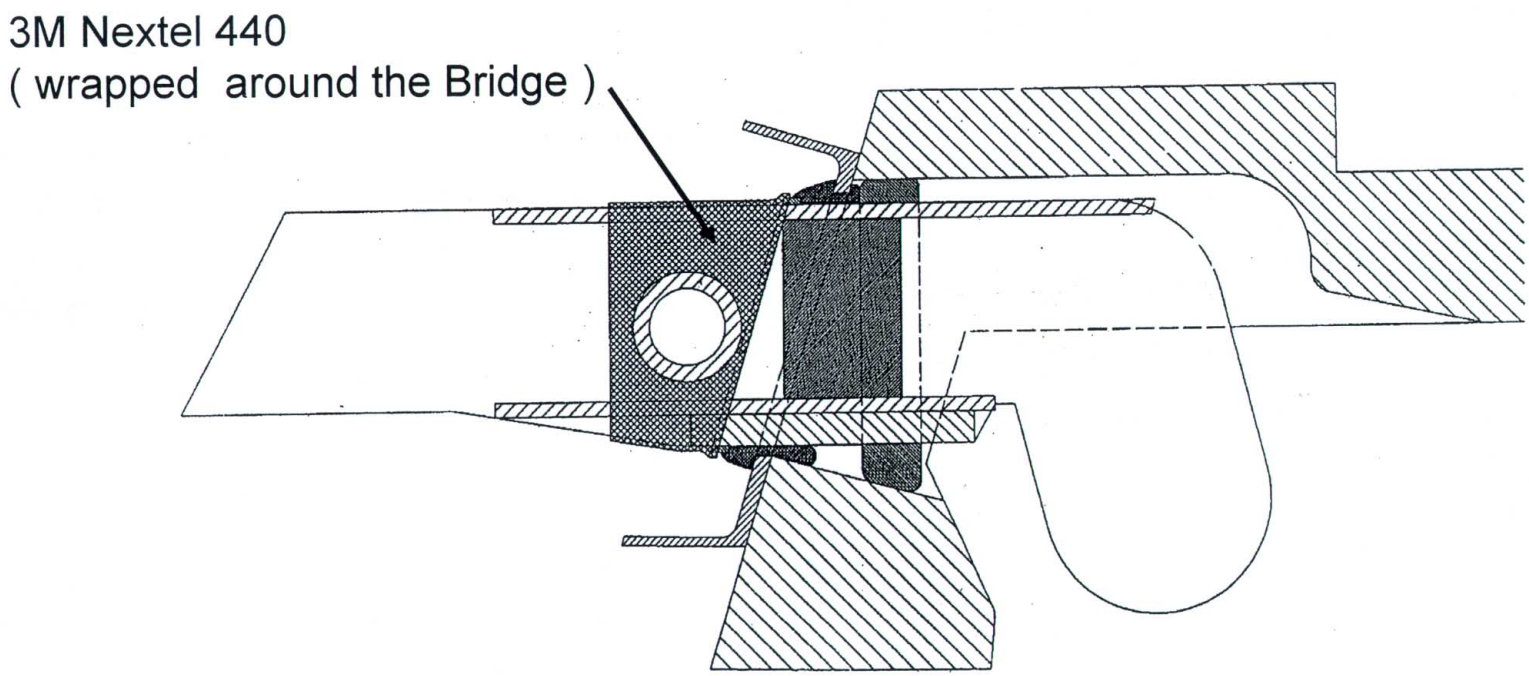

Forward Trunion Pin

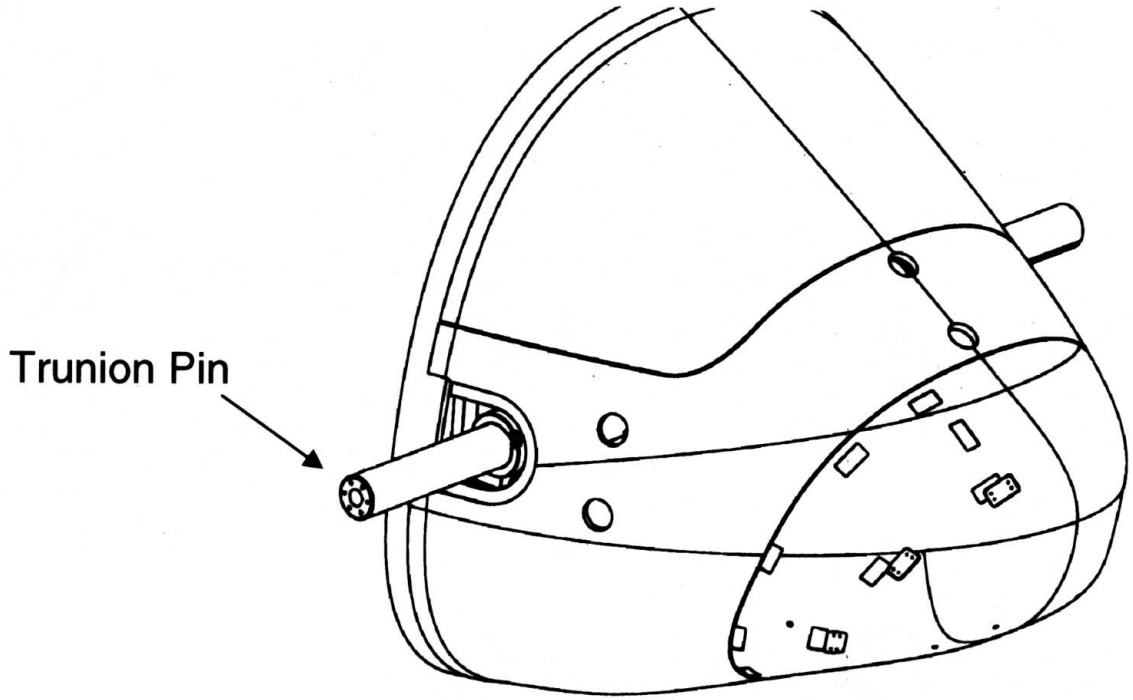

X-38 Forward Trunion Pin Retracted Showing Seal

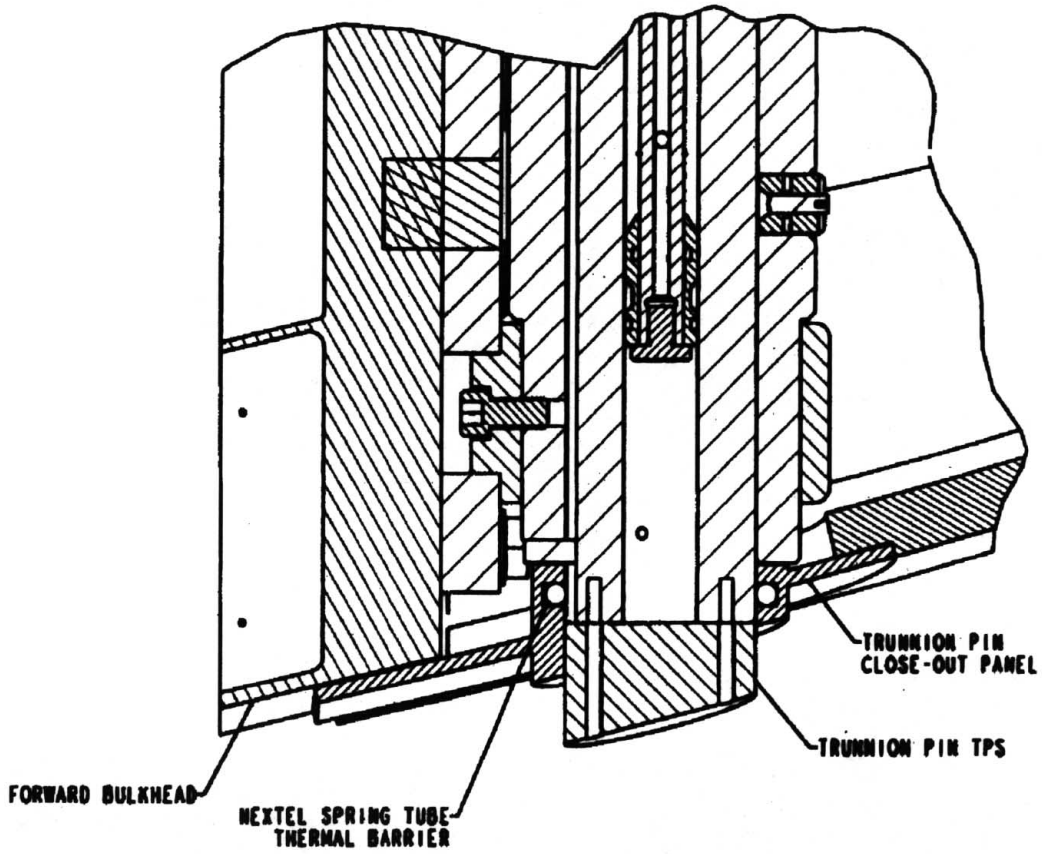

Backup Charts
Showing Additional Seal Locations

Seal Design

- **Chute line TPS**
  - To protect for blanket failure, a redundant system is incorporated to protect the parachute lines

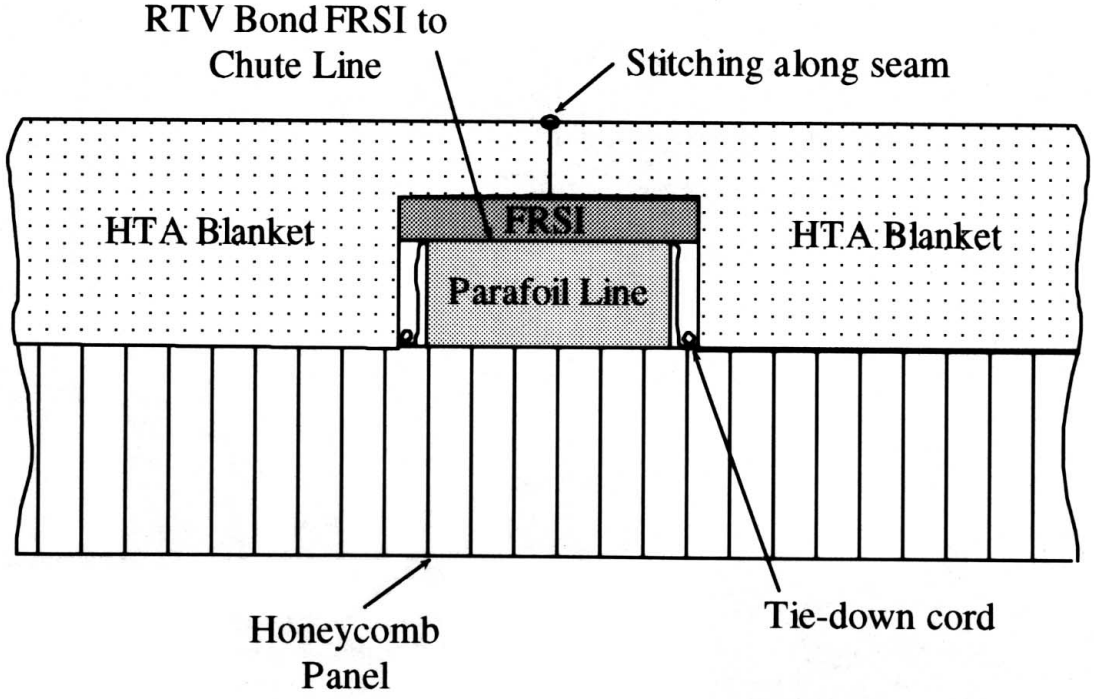

Nosecap TPS

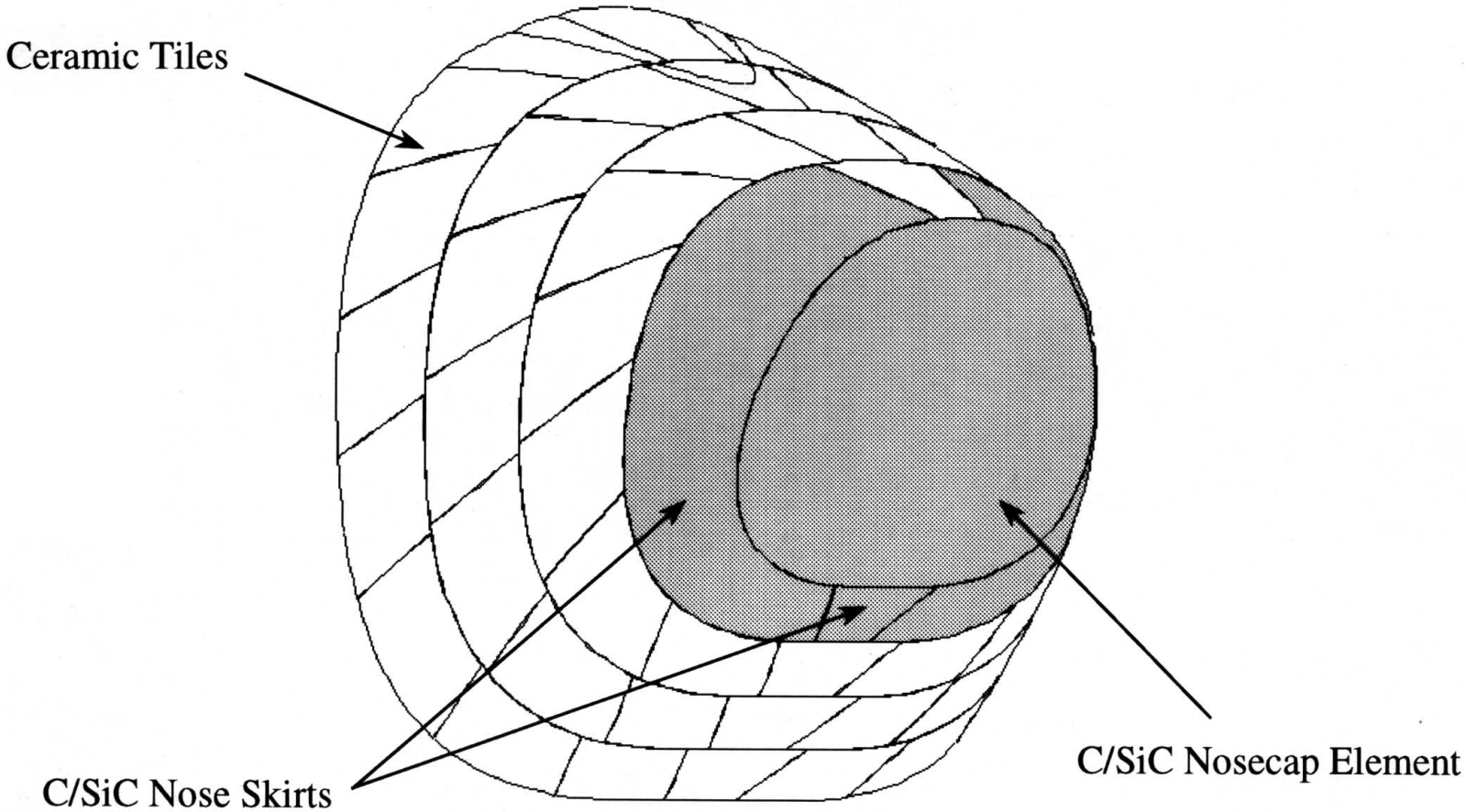

Interface Between Nose Cap and Nose Skirt With Rigid and Flexible Seal

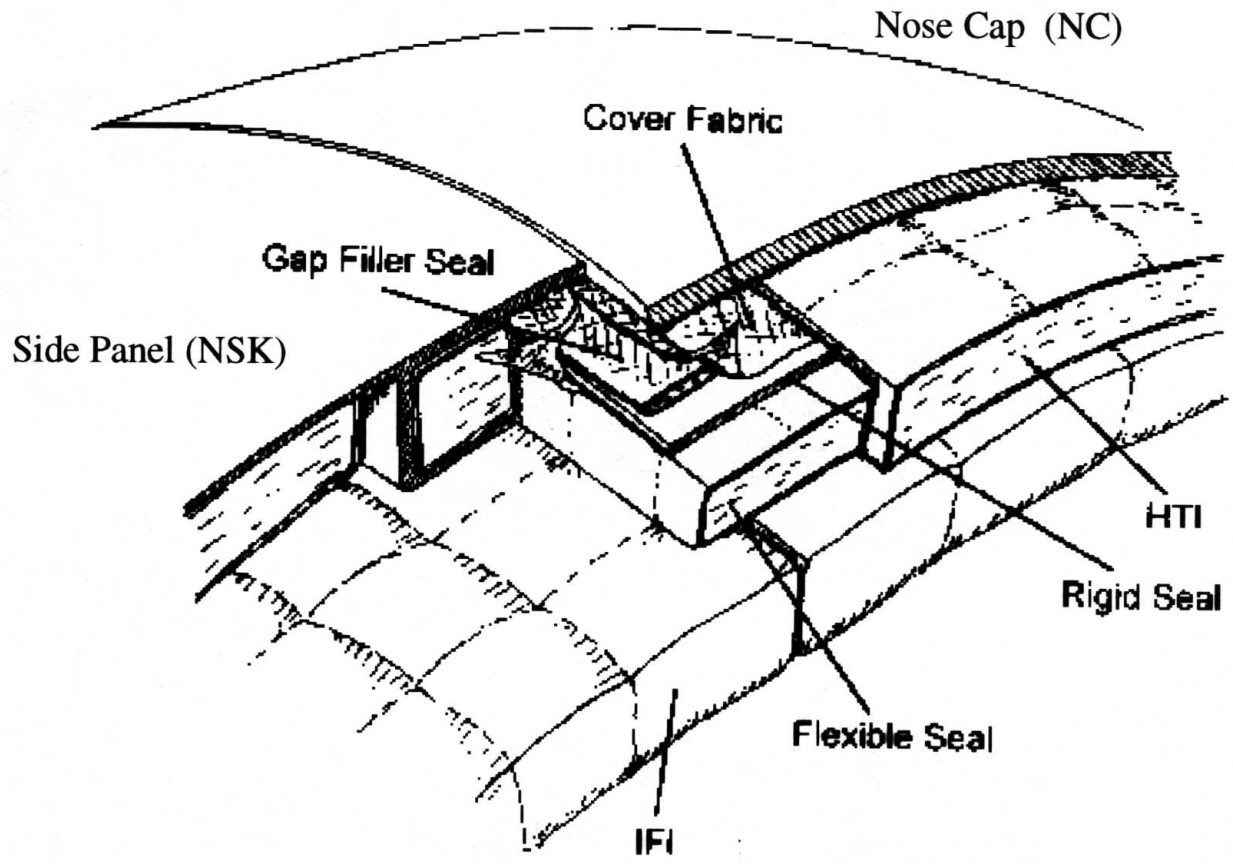

Fixation Concept of the Rigid Seal Between NC and NSK

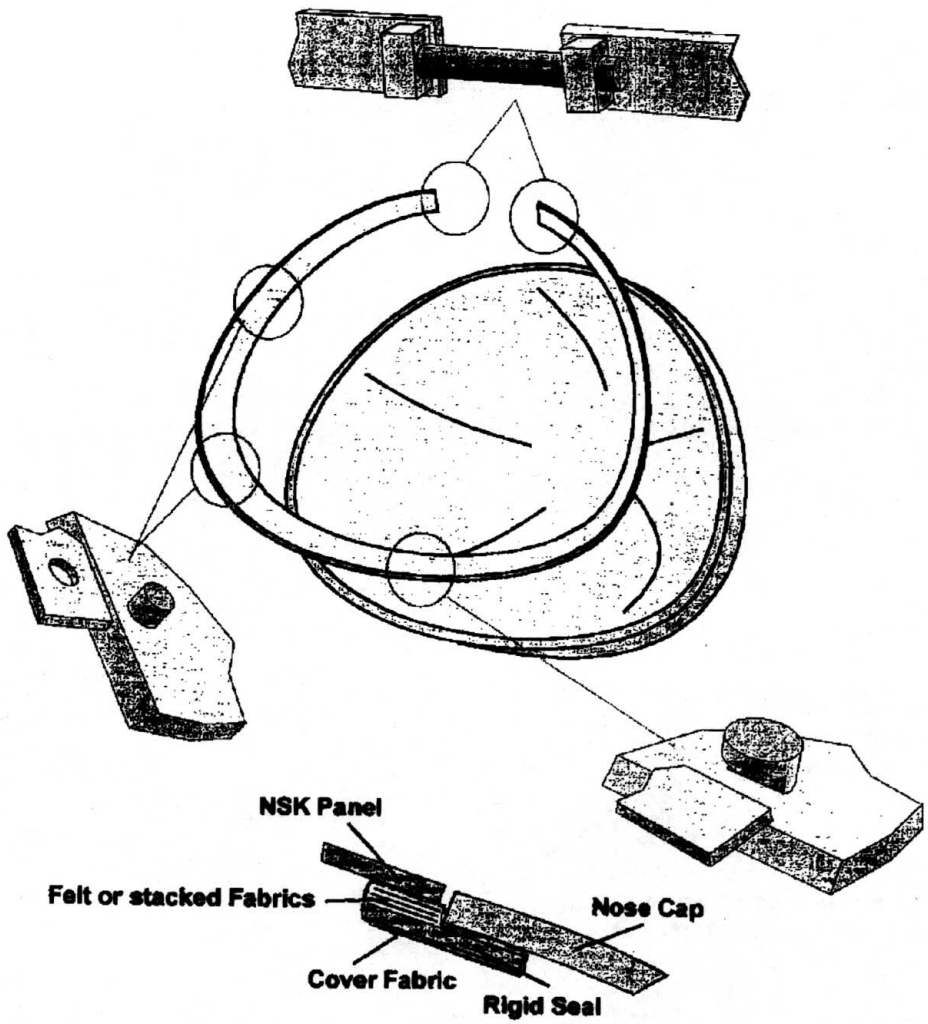

Chin Panel / Slide Panel

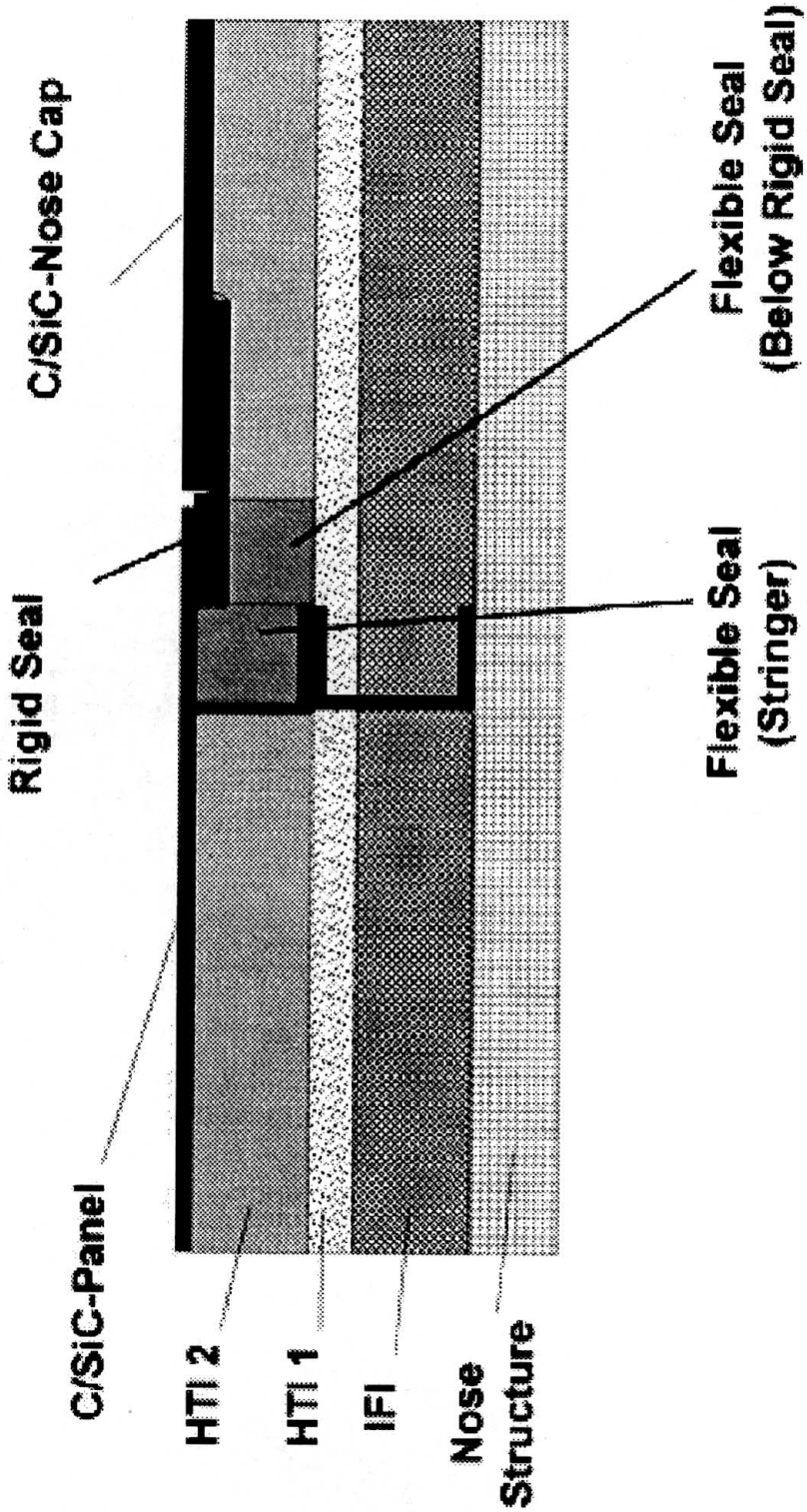
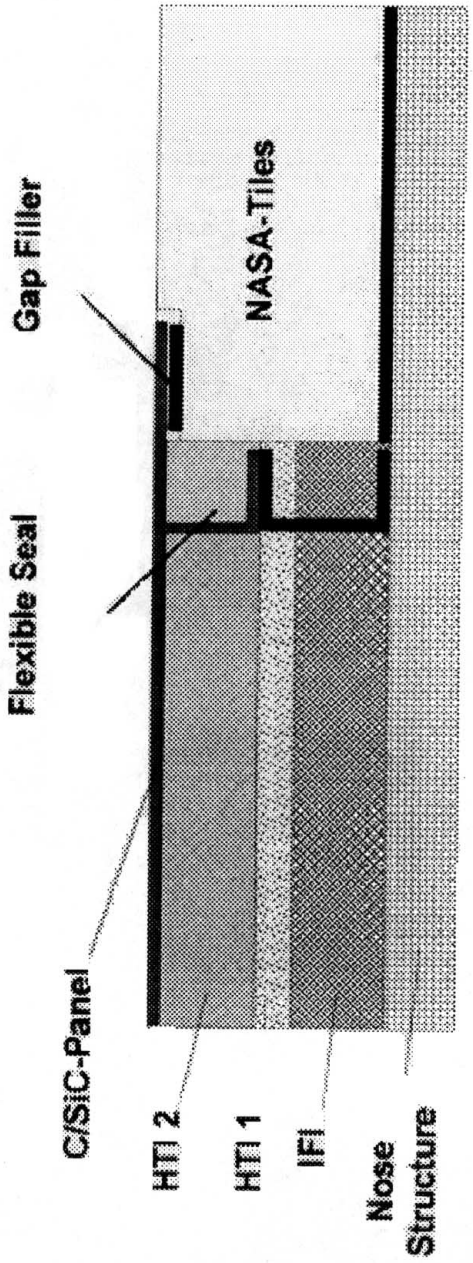
I/F NSK/Thruster Tile