CONTINUED EVALUATION OF THE HYBRID FLOATING BRUSH SEAL (HFBS)

Scott B. Lattime, Jack Braun, and Fred K. Choy
B&C Engineering Associates, Inc.
Akron, Ohio

Robert C. Hendricks and Bruce M. Steinetz
National Aeronautics and Space Administration
Glenn Research Center
Cleveland, Ohio

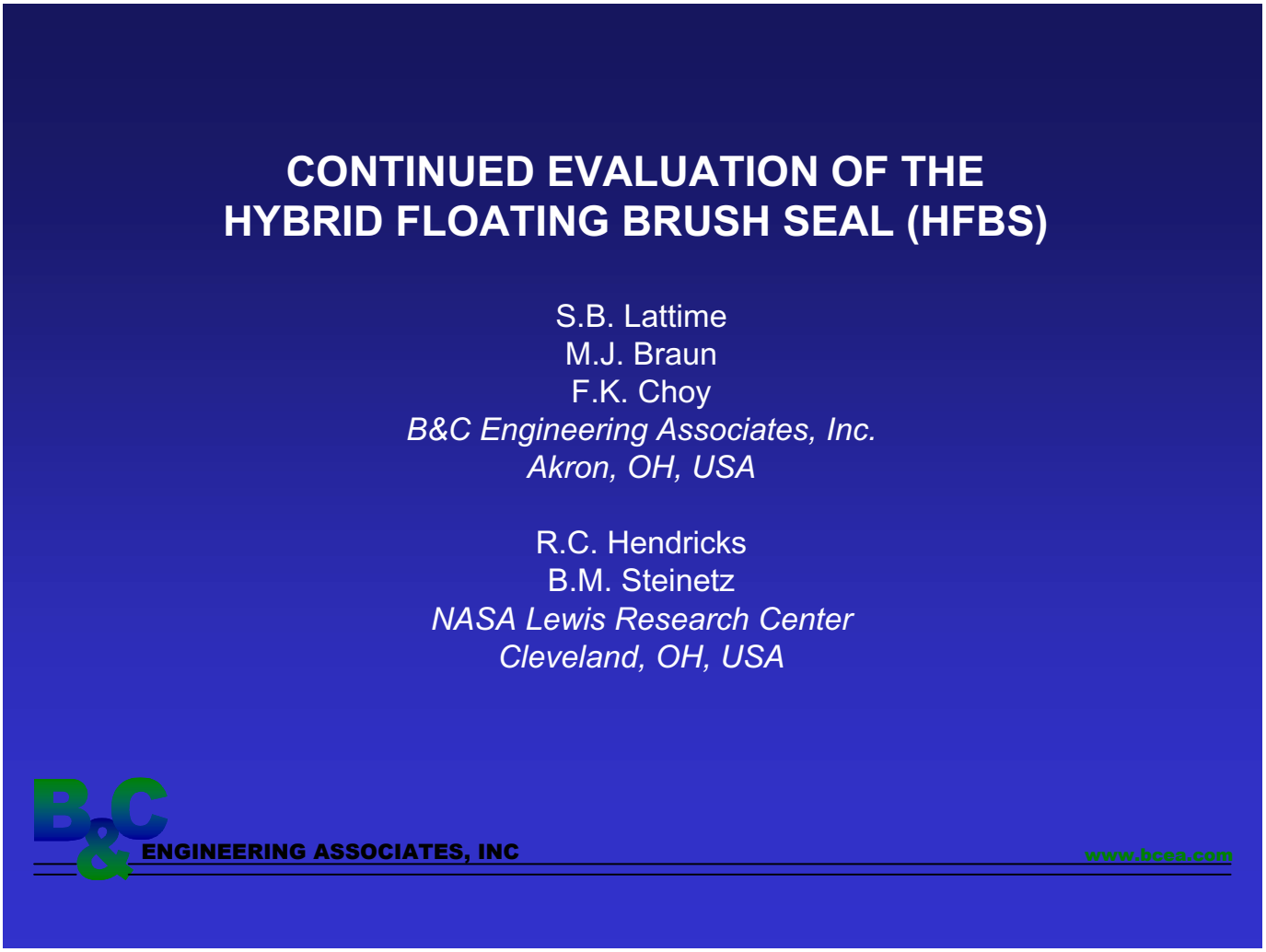

- Motivation
- HFBS Concept
- Experimental Apparatus
- Experimental Results
- Conclusions

Motivation

- increase thrust to weight ratio
- decrease specific fuel consumption
- eliminate wear of sealing components

HFBS Concept

- combining seal technologies
- allowing for axial & radial shaft excursions
- eliminate interface surface speeds

B&C ENGINEERING ASSOCIATES, INC

www.bcea.com

HFBS Concept

- combining seal technologies
  - brush seal
  - film riding face seal
- allowing for axial & radial shaft excursions
- eliminate interface surface speeds

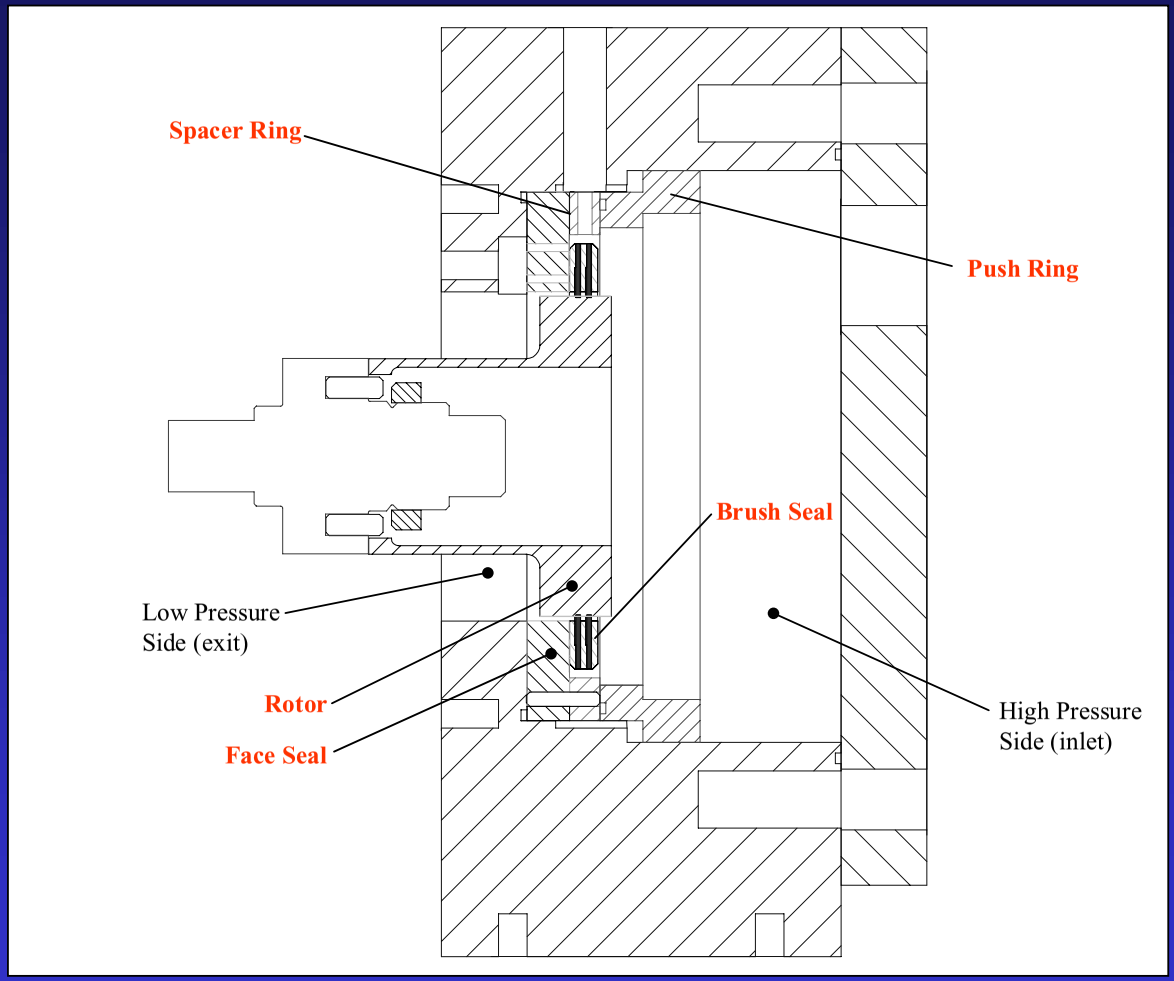

ENGINEERING ASSOCIATES, INC

www.bcea.com

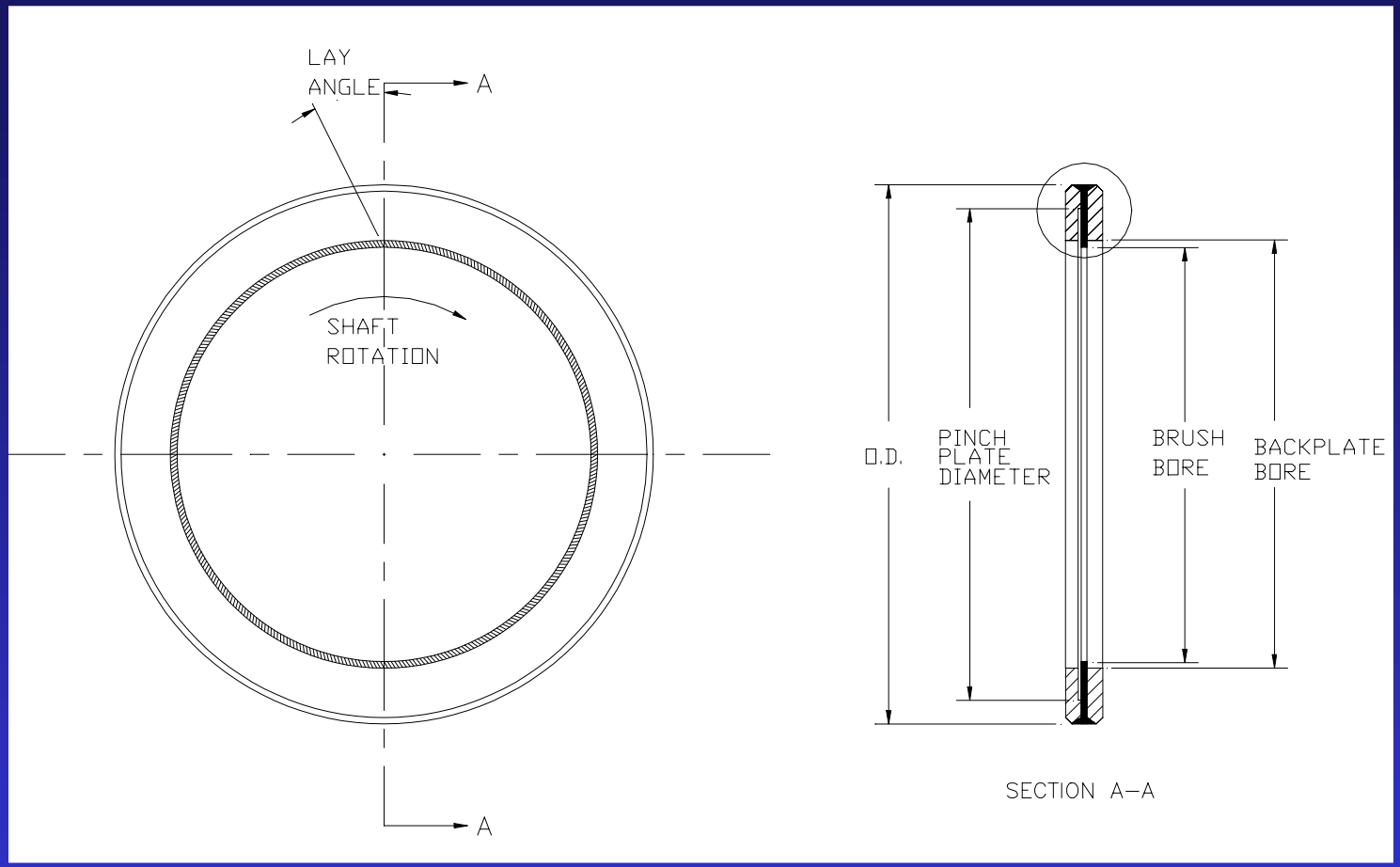

B&C ENGINEERING ASSOCIATES, INC

www.bcea.com

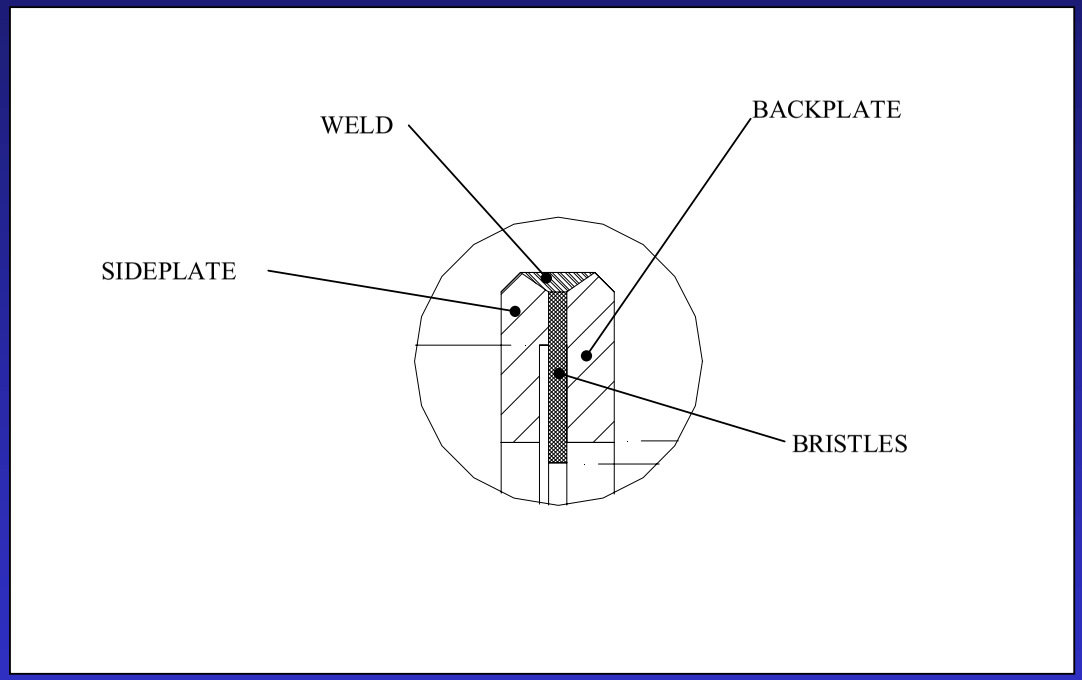
WELD
BACKPLATE
SIDEPLATE
BRISTLES

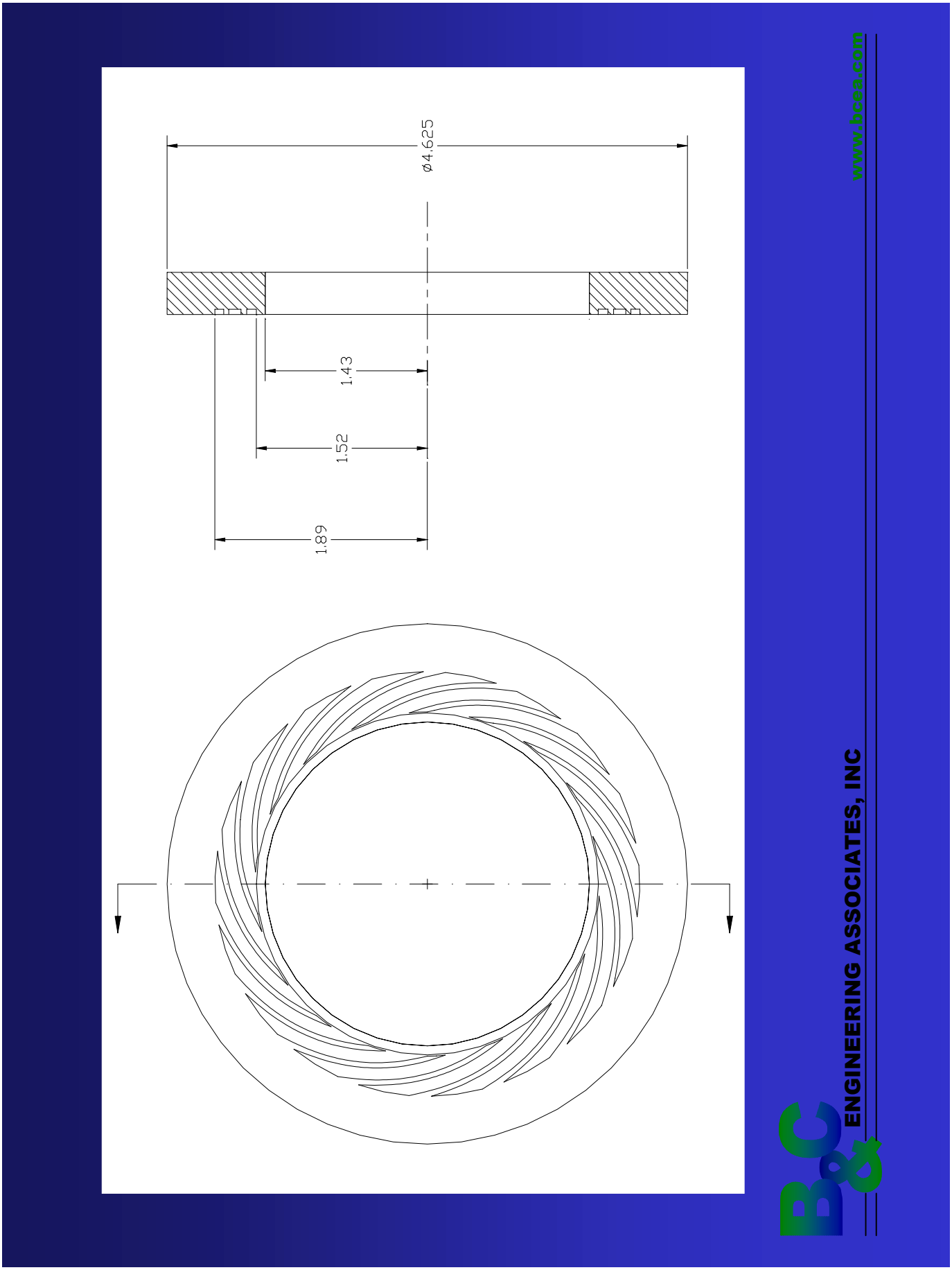
ø4.625
1.43
1.52
1.89
B&C
ENGINEERING ASSOCIATES, INC
www.bcea.com

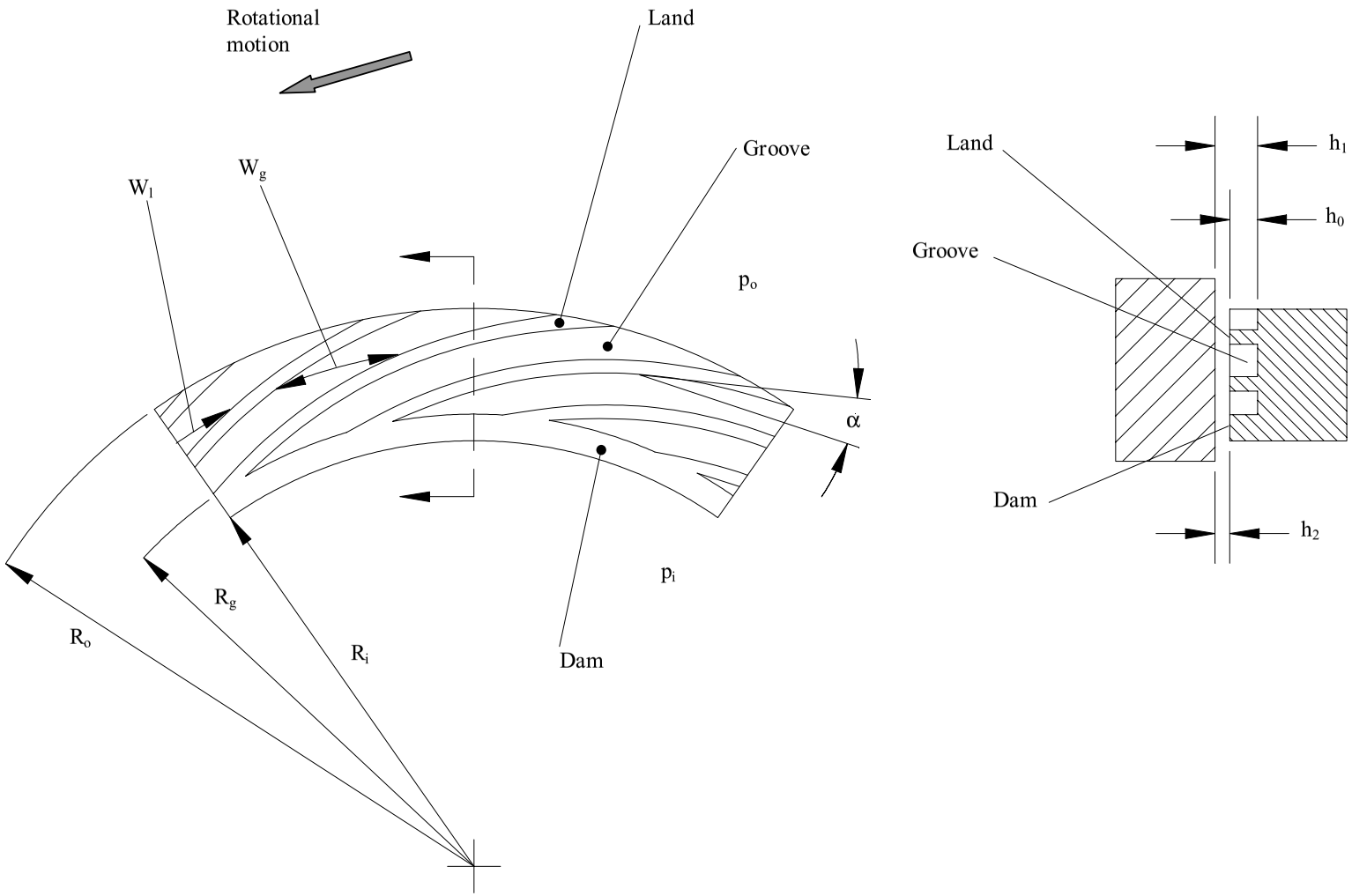

B&C ENGINEERING ASSOCIATES, INC
www.bcea.com

HFBS Concept

- combining seal technologies
- allowing for axial & radial shaft excursions
  - brush seal is compliant
  - brush seal “floats” on shaft
- eliminate interface surface speeds

HFBS Concept

- combining seal technologies
- allowing for axial & radial shaft excursions
- eliminate interface surface speeds
  - brush seal rotates with the shaft

Experimental Apparatus

- room temperature test rig (RTTR)
- brush seals
- film riding face seal

room temperature test rig (RTTR)

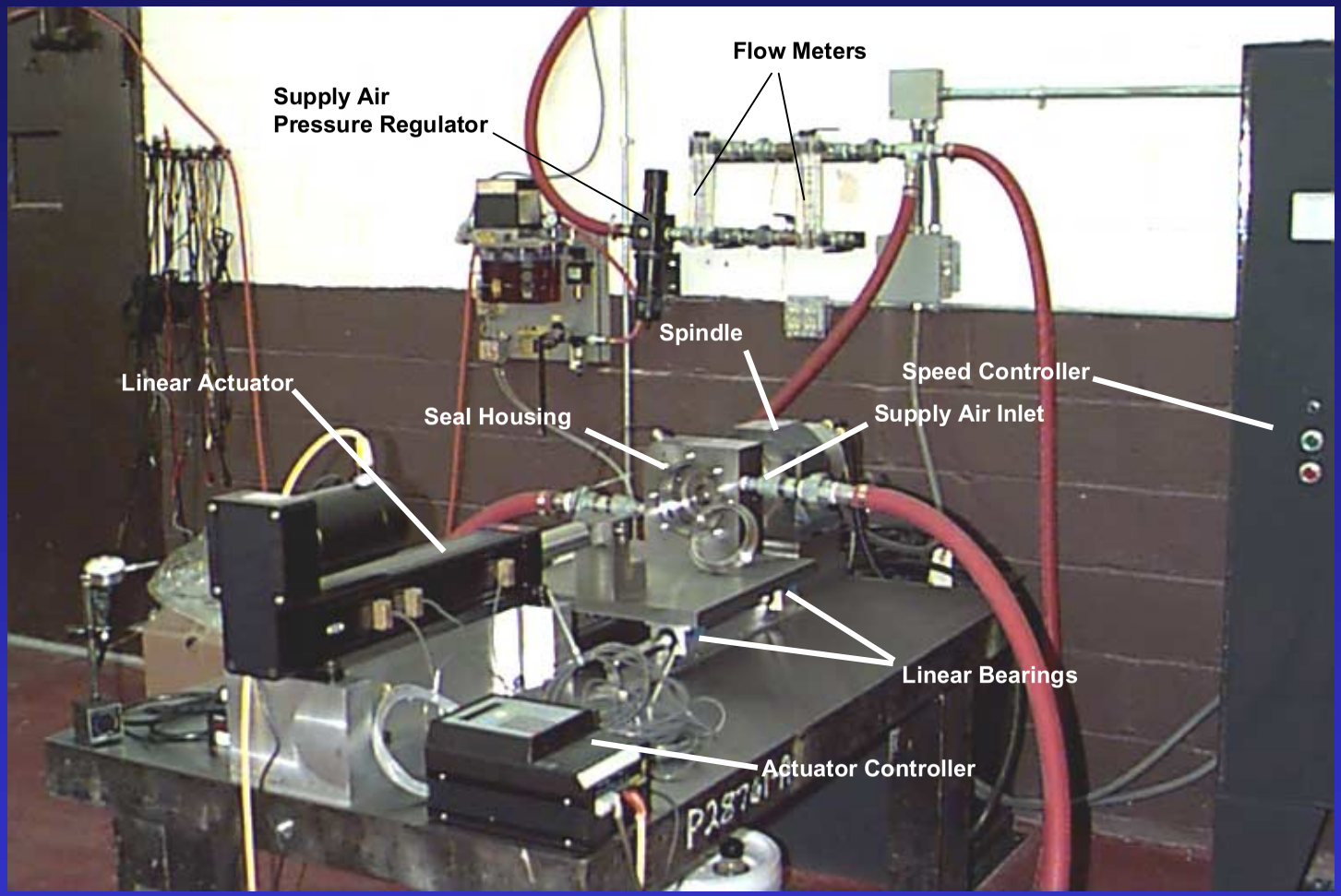

B&C ENGINEERING ASSOCIATES, INC

www.bcea.com

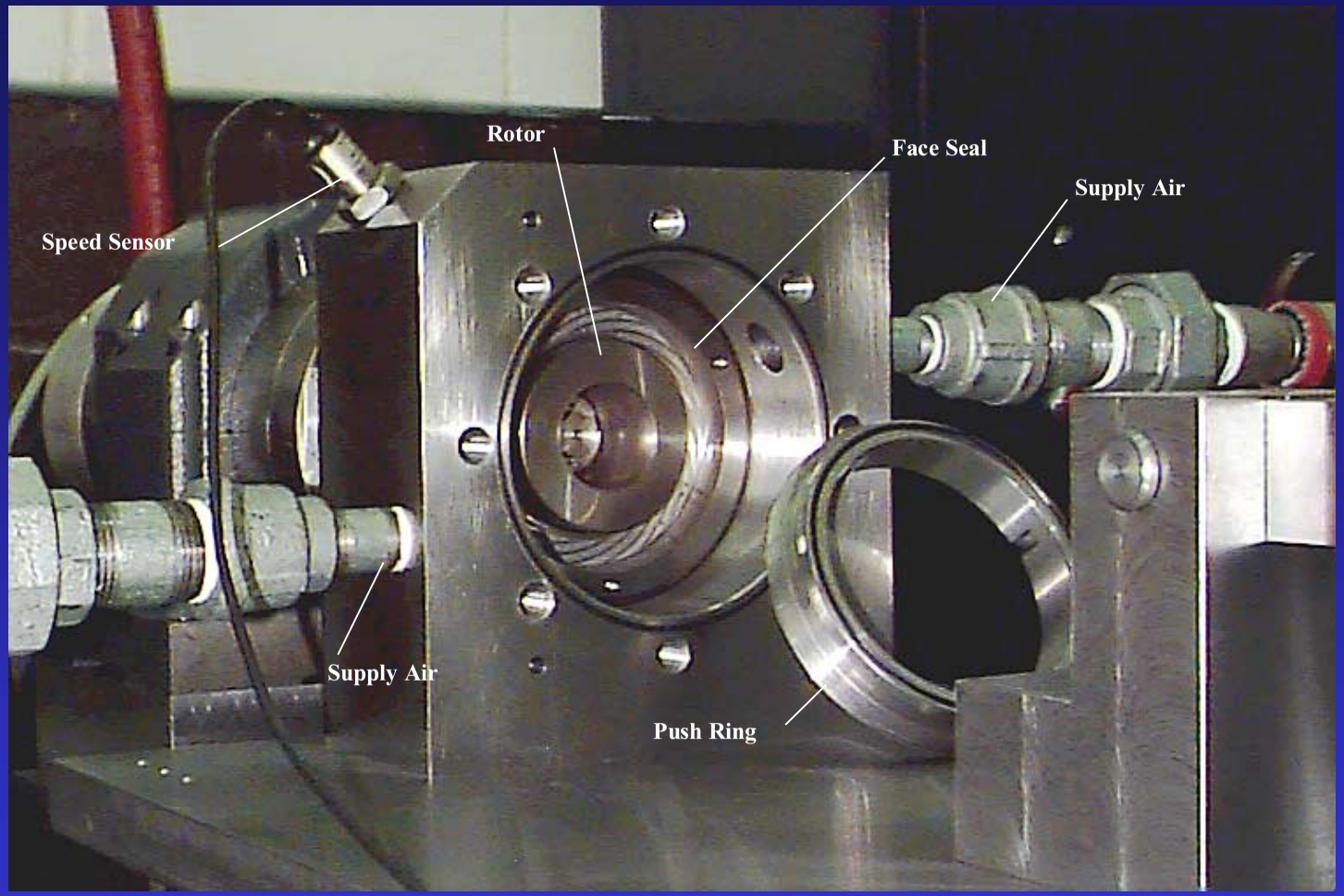

B&C ENGINEERING ASSOCIATES, INC

www.bcea.com

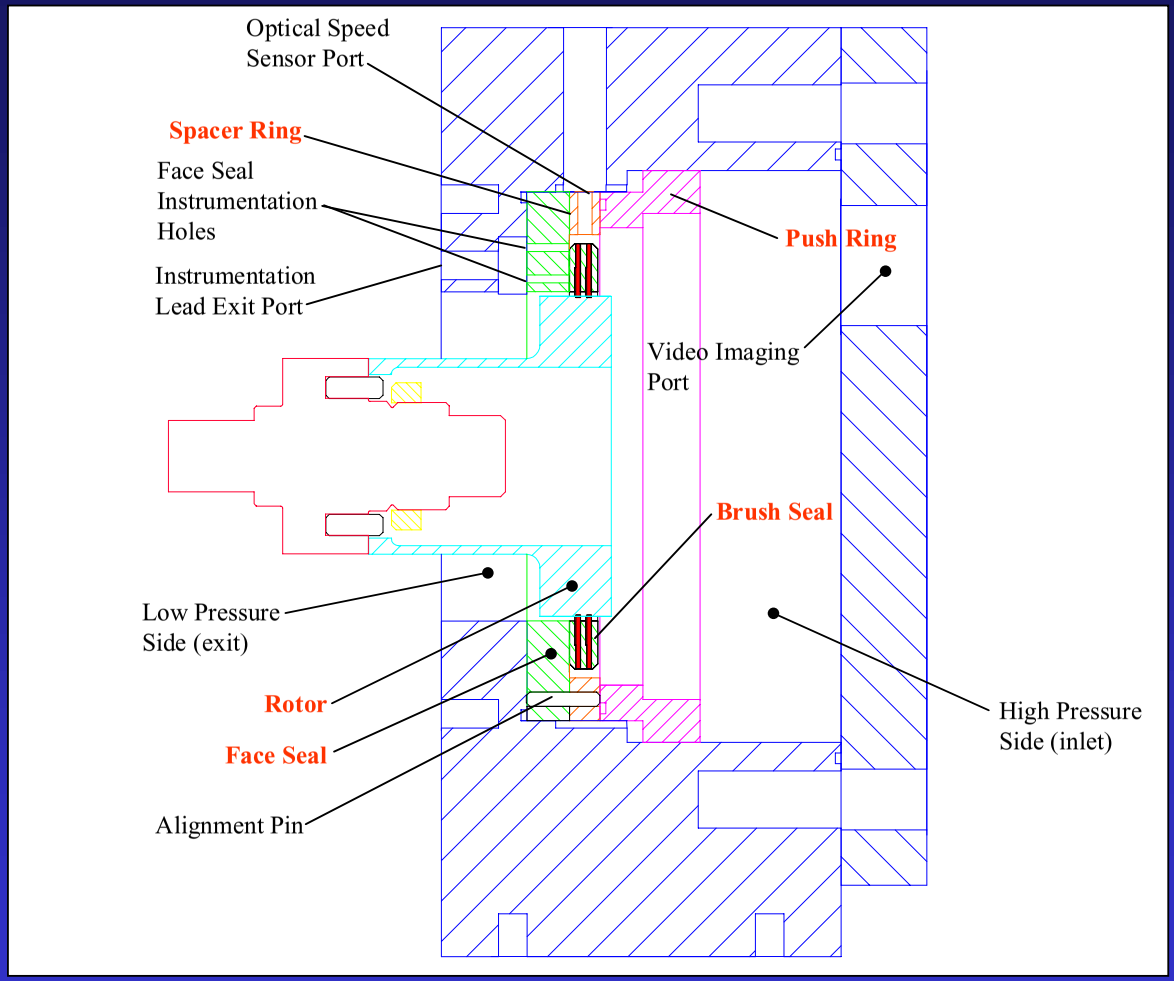
Optical Speed
Sensor Port
Spacer Ring
Face Seal
Instrumentation
Holes
Instrumentation
Lead Exit Port
Push Ring
Video Imaging
Port
Brush Seal
Low Pressure
Side (exit)
Rotor
Face Seal
Alignment Pin
High Pressure
Side (inlet)

brush seals

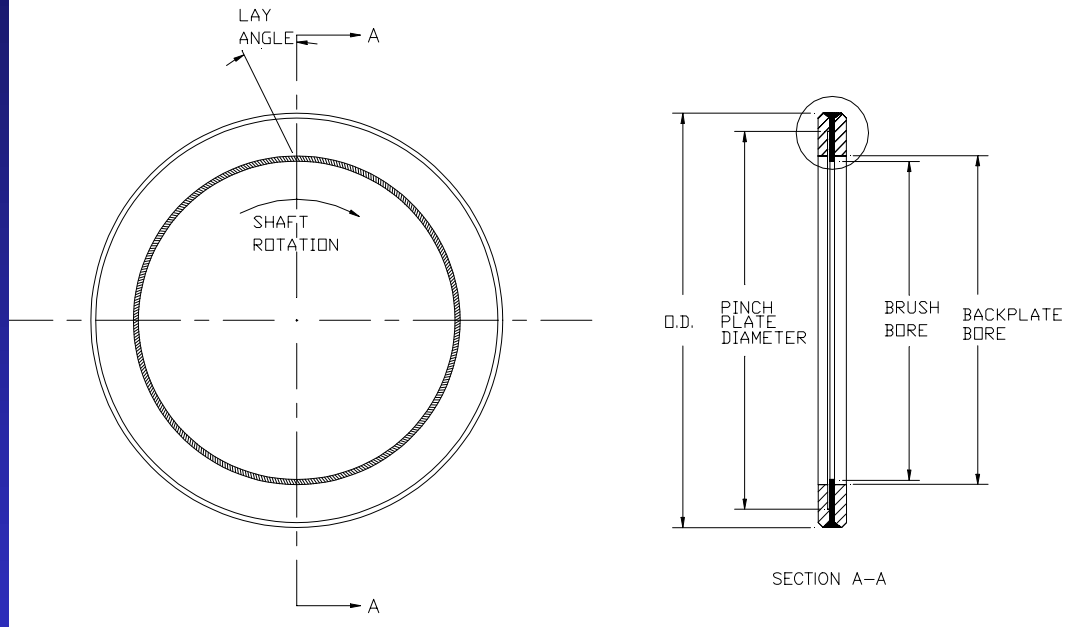

Figure 3: Single Brush Seal

B&C ENGINEERING ASSOCIATES, INC
www.bcea.com

The design of a brush seal for the HFBS is significantly different from that of a stationary brush seal.

Stationary brush seals

- focus is largely on tribo-pairing the materials of the brush and the moving rotor
- reduce the wear at the interface of the two components

HFBS

- prevent the bristles from lifting off the shaft, due to centrifugal forces
- eliminate relative velocities between the two components

Bristle Liftoff Model

The design process of the brush seal involved parametric calculations using the geometric characteristics and material properties of the bristles.

The calculations allowed the determination of the highest rotational speed at which the bristles would begin to lift off the rotor for a given bristle geometry. These properties included:

a) free length of the bristles

b) bristle material

c) diameter of the bristles

d) lay angle of the bristles

e) bristle pre-load

f) bending stress of the bristles

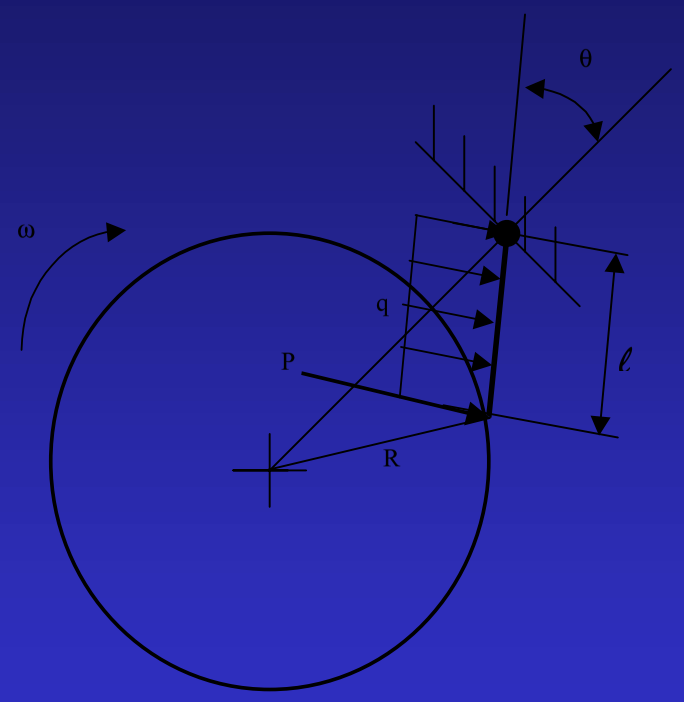

B&C ENGINEERING ASSOCIATES, INC

www.bcea.com

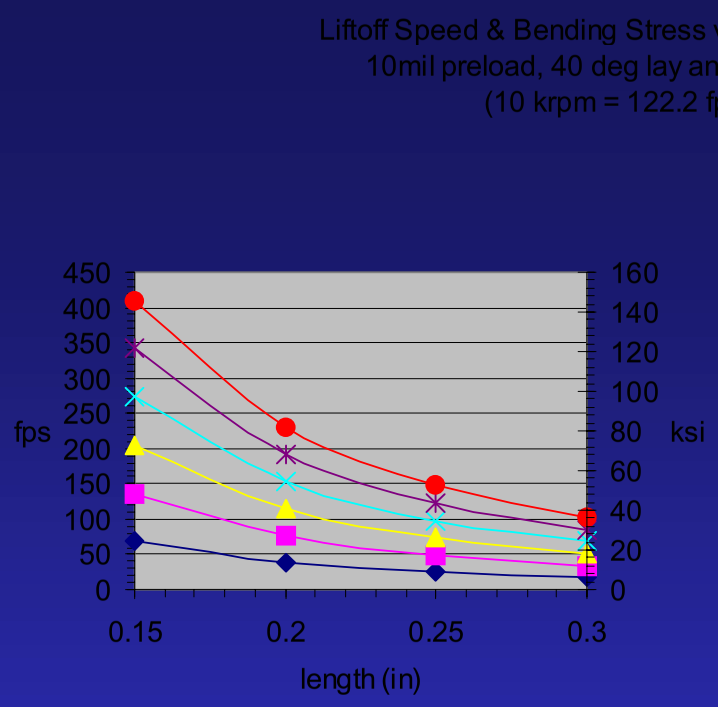
Liftoff Speed & Bending Stress vs Bristle Length
10mil preload, 40 deg lay angle, 2.8" Dia
(10 krpm = 122.2 fps)
fps
ksi
length (in)
Bristle Diameter
0.001
0.002
0.003
0.004
0.005
0.006

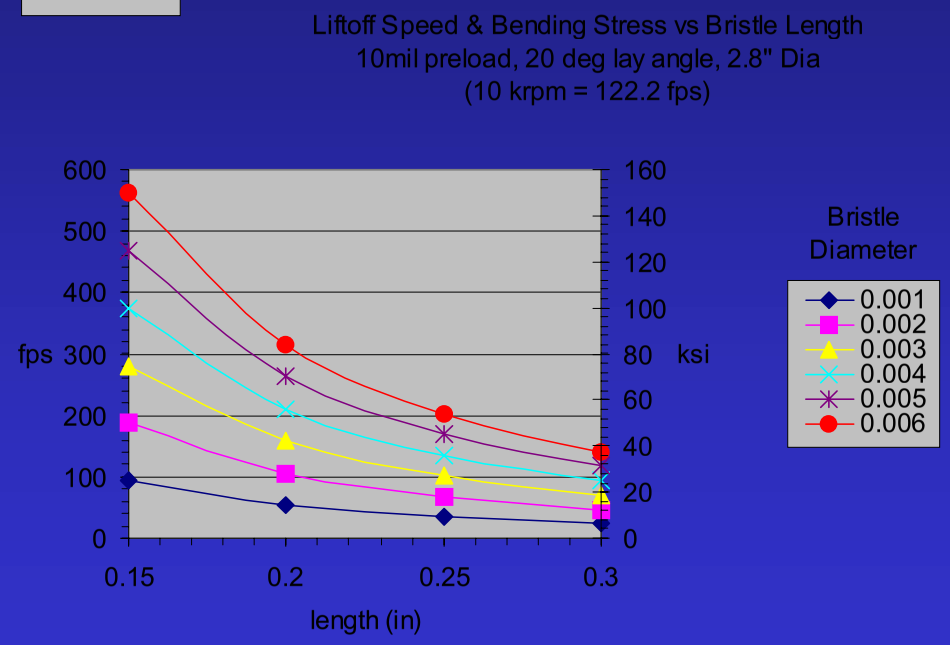
Liftoff Speed & Bending Stress vs Bristle Length
10mil preload, 20 deg lay angle, 2.8" Dia
(10 krpm = 122.2 fps)
fps
ksi
length (in)
Bristle Diameter
0.001
0.002
0.003
0.004
0.005
0.006

B&C ENGINEERING ASSOCIATES, INC

www.bcea.com

film riding face seal

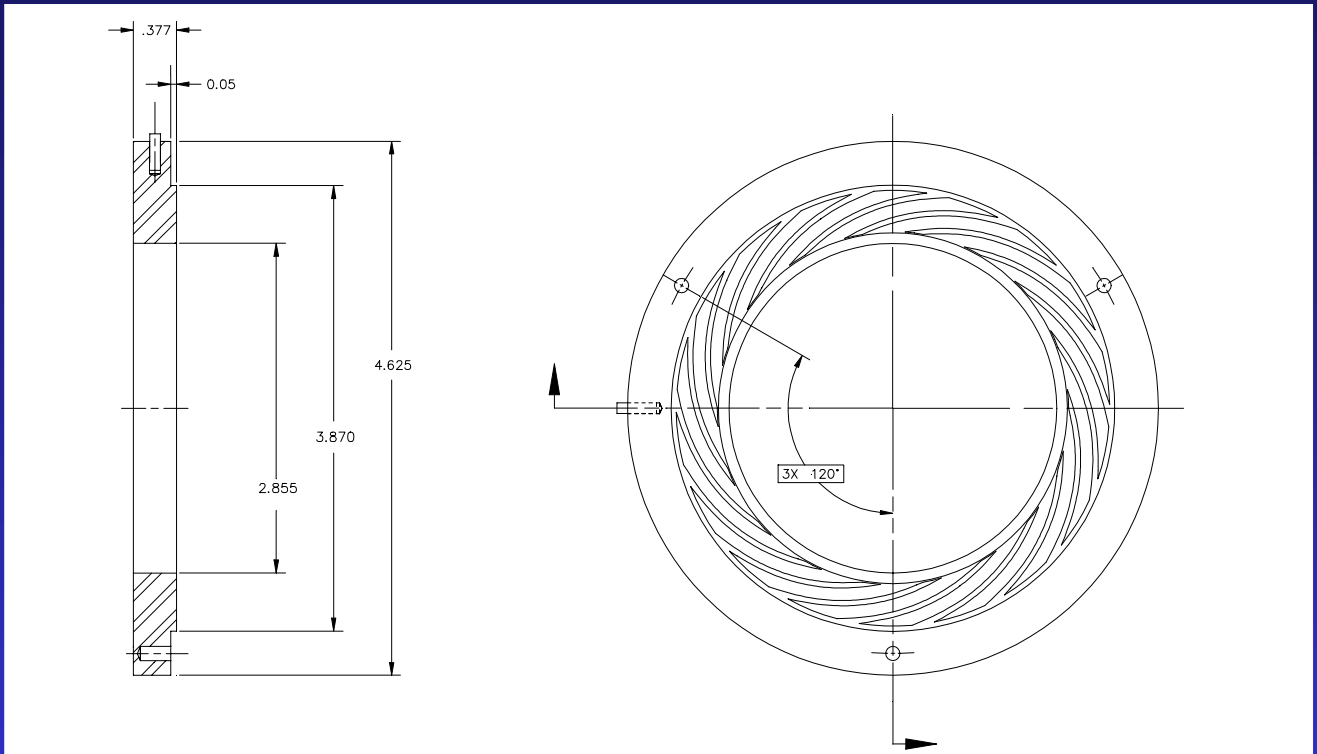

ENGINEERING ASSOCIATES, INC

www.bcea.com

Experimental Results

- leakage performance
- axial shaft movement
- shaft radial runout

leakage performance

Sealing performance shall be expressed in terms of a leakage flow factor ϕ.

The flow factor is defined as:

$$\phi = m(Tave)/(PuD)$$

where:

m	=	mass flow rate of air (pps)
Tave	=	average upstream air temperature (ºR)
Pu	=	average upstream air pressure (psia)
D	=	shaft outer diameter (in)

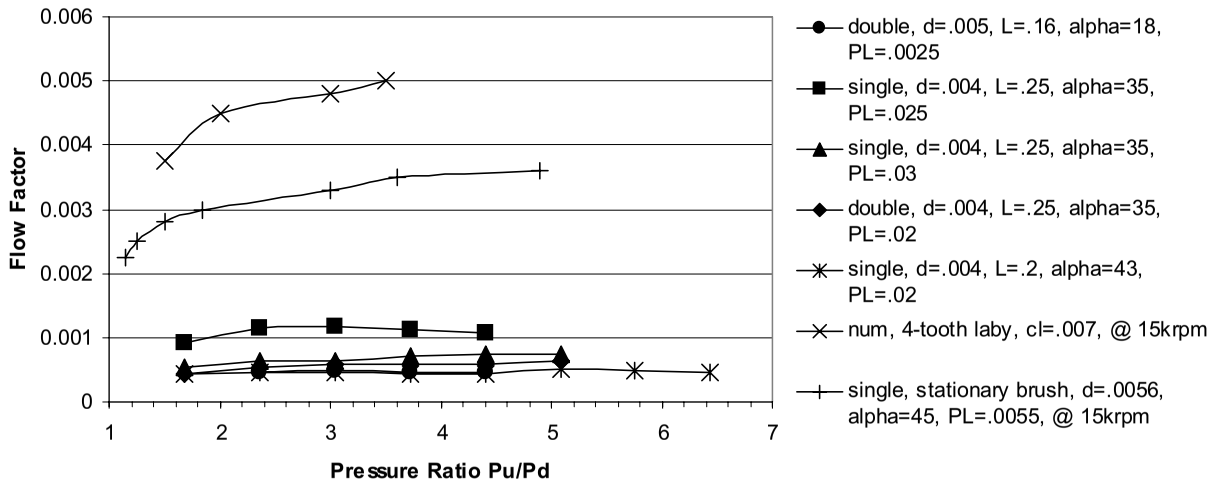

Figure 6: Leakage Performance @ 16krpm (197fps)

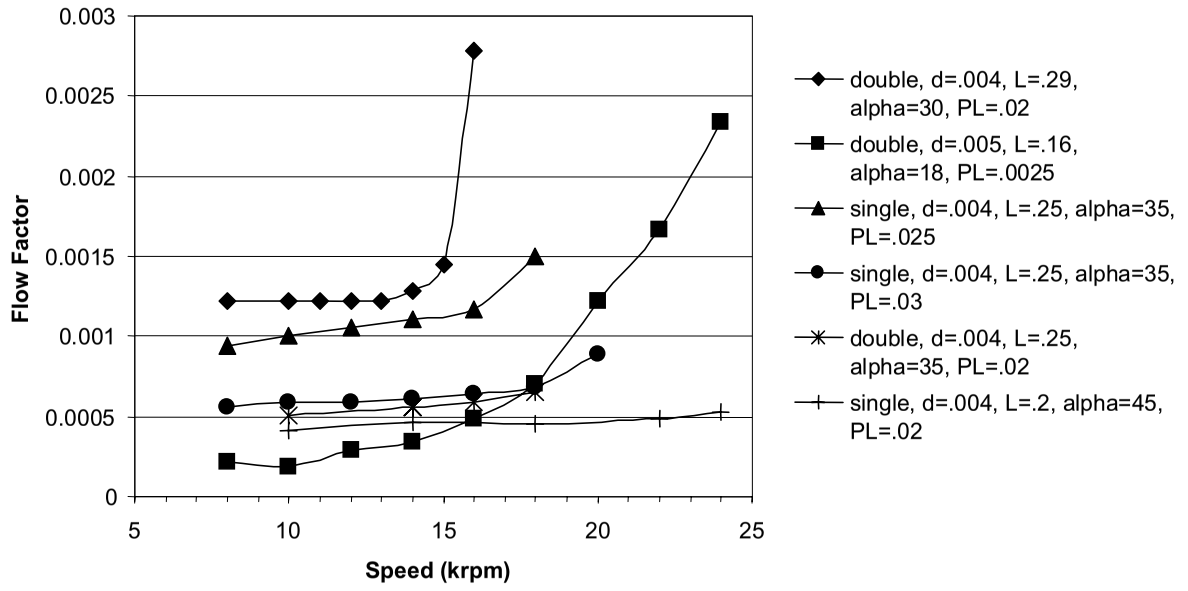

Figure 7: Leakage Performance @ P_u/P_d=3.04 (10krpm=123fps)

B&C ENGINEERING ASSOCIATES, INC
www.bcea.com

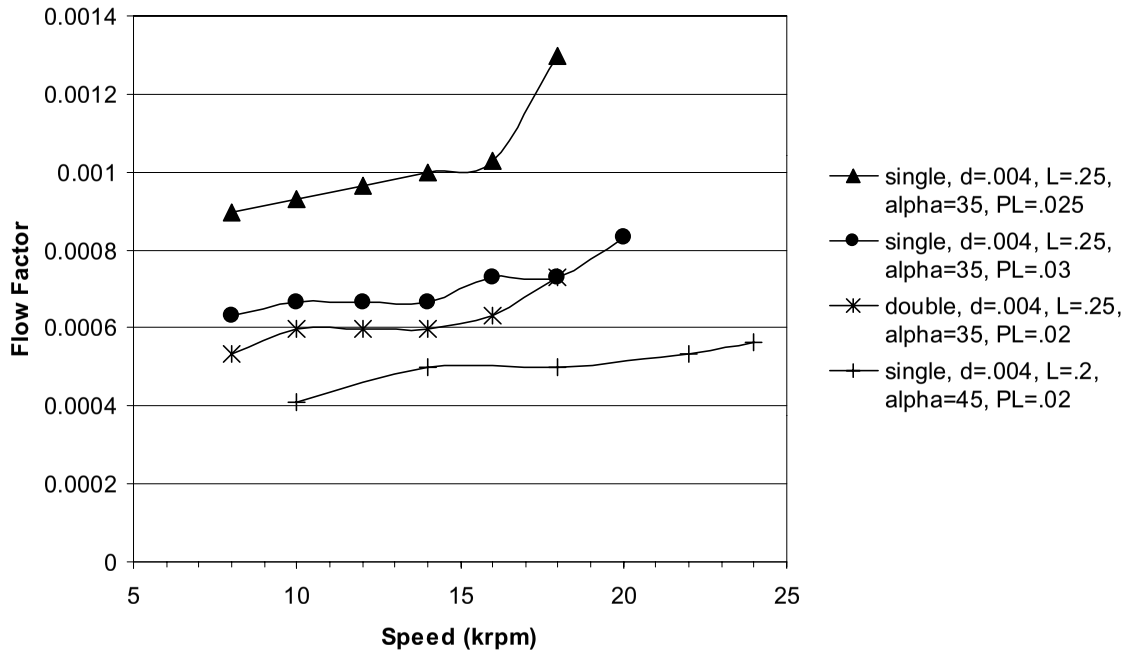

Figure 8: Leakage Performance @ P_u/P_d =5.1 (10krpm=123fps)

axial shaft movement

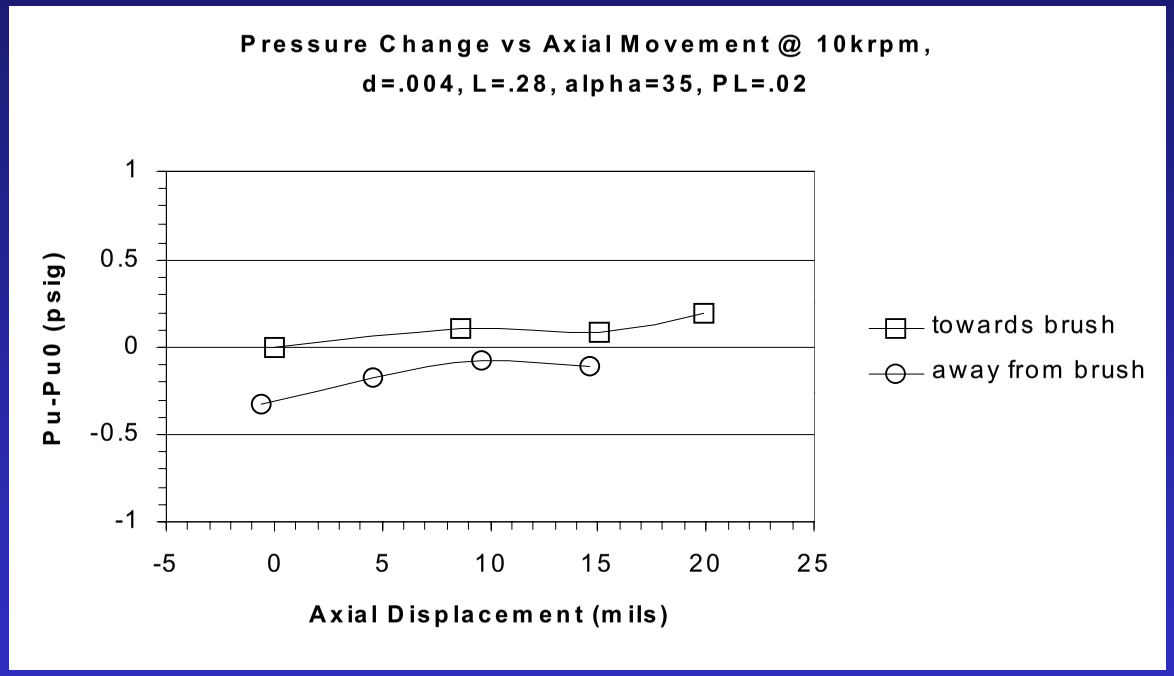

B&C ENGINEERING ASSOCIATES, INC

www.bcea.com

shaft radial runout

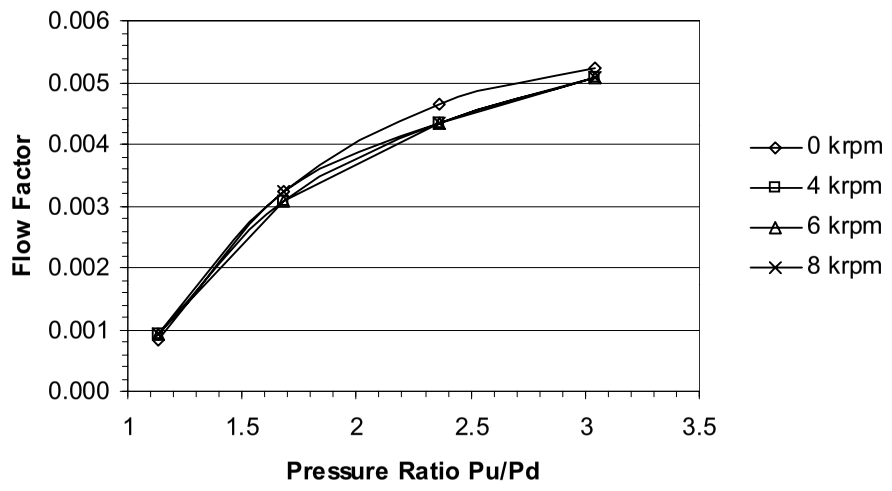

Figure 10: Seal Performance with 7mil radial runout, d=.004, L=.28, alpha=35, PL=.02 (10krpm=123fps)

B&C ENGINEERING ASSOCIATES, INC
www.bcea.com

Conclusions

- verified functionality and improved sealing performance of the HFBS at relatively high operational speeds
- leakage performance acceptable for gas turbine applications
- possibility of drastically improving engine efficiency with increased sealing performance
- experimentally tested/proved the theory of the “floating” brush seal by sealing around a rotating shaft during axial motion between the shaft and seal as well as sealing a rotating shaft with a large radial runout
- capable of providing improved sealing performance with the elimination of interface wear that exists in the current "standard" brush seal technology