Tony O'Meara
Perkin Elmer Fluid Sciences
Warwick, Rhode Island

CENTURION ™ MECHANICAL SEALS
PROVEN PERFORMANCE · RELIABLE SOLUTIONS

SEAL DEVELOPMENTS AT

Tony O'Meara
15 Pioneer Avenue, Warwick RI 02888
(401) 781-4700
Tony.O'Meara@perkinelmer.com
October 1999

NAME CHANGE

12/98 Í Ò ® Sealol EPD

01/99 Í Ò ® Engineered Products
CENTURION ™ MECHANICAL SEALS

10/99 PerkinElmer fluid sciences. CENTURION ™ MECHANICAL SEALS

RESULTS OF NAME CHANGE

- A new legal entity under PerkinElmer Fluid Sciences
- No change to manufacturer's cage code
- No change to management, key personnel, or locations
- No change to processes or key contacts

R&D CONSOLIDATION

- R&D Facilities & Personnel consolidated at Warwick RI.
- 8/99 - Personnel Transition Complete
- 1/00 - New R&D Facility At Scheduled Completion

RESULTS OF CONSOLIDATION

- Focused Dynamic Seal R&D / Product Development
- 4500 Sq.Ft New Product Development Facility at Warwick RI
- Enhanced Dynamic Seal Engineering Capability
- Enhanced Technical Resources Available to Focus on Dynamic Seal Vision / Goals

PRODUCT DEVELOPMENT FACILITY - Complete 1/1/2000

PRODUCT DEVELOPMENT FACILITY - Complete 1/1/2000

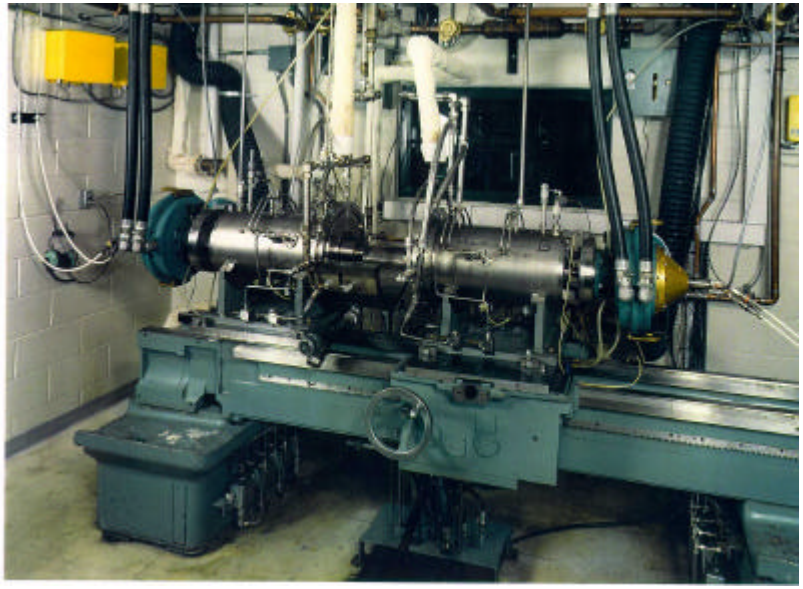

ENGINEERING

- Focus on Aerospace
- One Organization: Four Engineering Functions
  - Product Engineering
  - New Product Development
  - Test Engineering / Facilities
  - Materials Engineering
- Ongoing Commitment to New Product Development
- Emphasize Partnership Engineering
  - Build and Maintain Intimate Relationships with Major OEM Customers
  - Maintain On Site Presence at Customer Facility if Necessary
  - Active Participation in OEM *Preliminary* Design Process

TEST FACILITIES / TECHNICAL SERVICES

- Analytical Capability
  - **ANSYS** V5.3 Non Linear FEA
  - **ADINA** Structural Non Linear FEA / Computational Fluid Dynamics
  - Multiple Proprietary Design Codes, etc.

- Materials Laboratory Facilities
  - Full Complement of Optical examination equipment, Formscan, Tallysurf etc.
  - SEM with X-Ray Energy Despersive Analysis Capability
  - Thermal Analysis capability (TGA, DTA, DSC, TMA)

- Dynamic Seal Test Rigs Available

– ADV AERO RIG	25,000 rpm	120 psi	1000F	40 HP
– AERO RIG	36,000 rpm	100 psi	500F	20 HP
– HIGH SPEED RIG	45,000 rpm	100 psi	400F	25 HP
– GEARBOX RIG	20,000 rpm	500 psi	350F	50 HP
– HV RIG	51,000 rpm	145 psi	500F	
– SN1 RIG	15,000 rpm	145 psi	400F	
– TRIBOLOGY RIG	60,000 rpm		800F	

- PC Based Data Acquisition System (LabView)

PRODUCT PLATFORMS

- Large Engine Mainshaft (Face)
- Small Engine / Accessory Gearbox Face Seals
- Bellows Face Seals
- Segmented Radial Seals (Contacting and Archbound)
- Clearance (Floating Ring) Seals
- Brush Seals

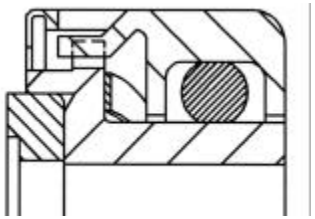

- Design and Manufacture Multiple Seal Configurations
  - Extensive Aerospace Qualifications Base for Each Platform
    - Enables True Design Objectivity

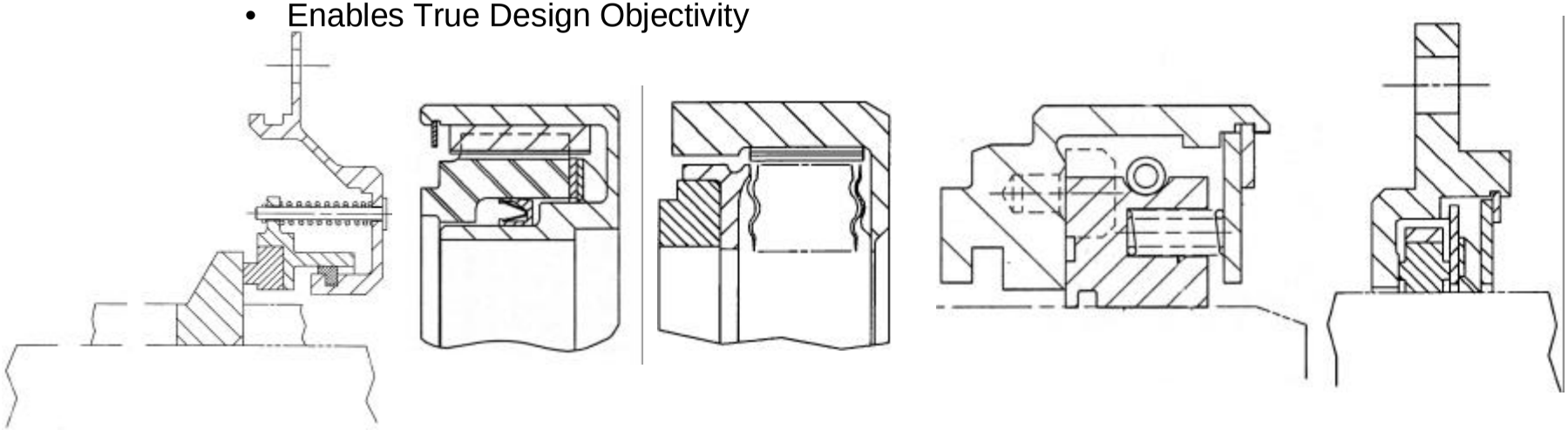

ANALYTICAL DEVELOPMENTS

- Structural / Fluid Modeling Capability

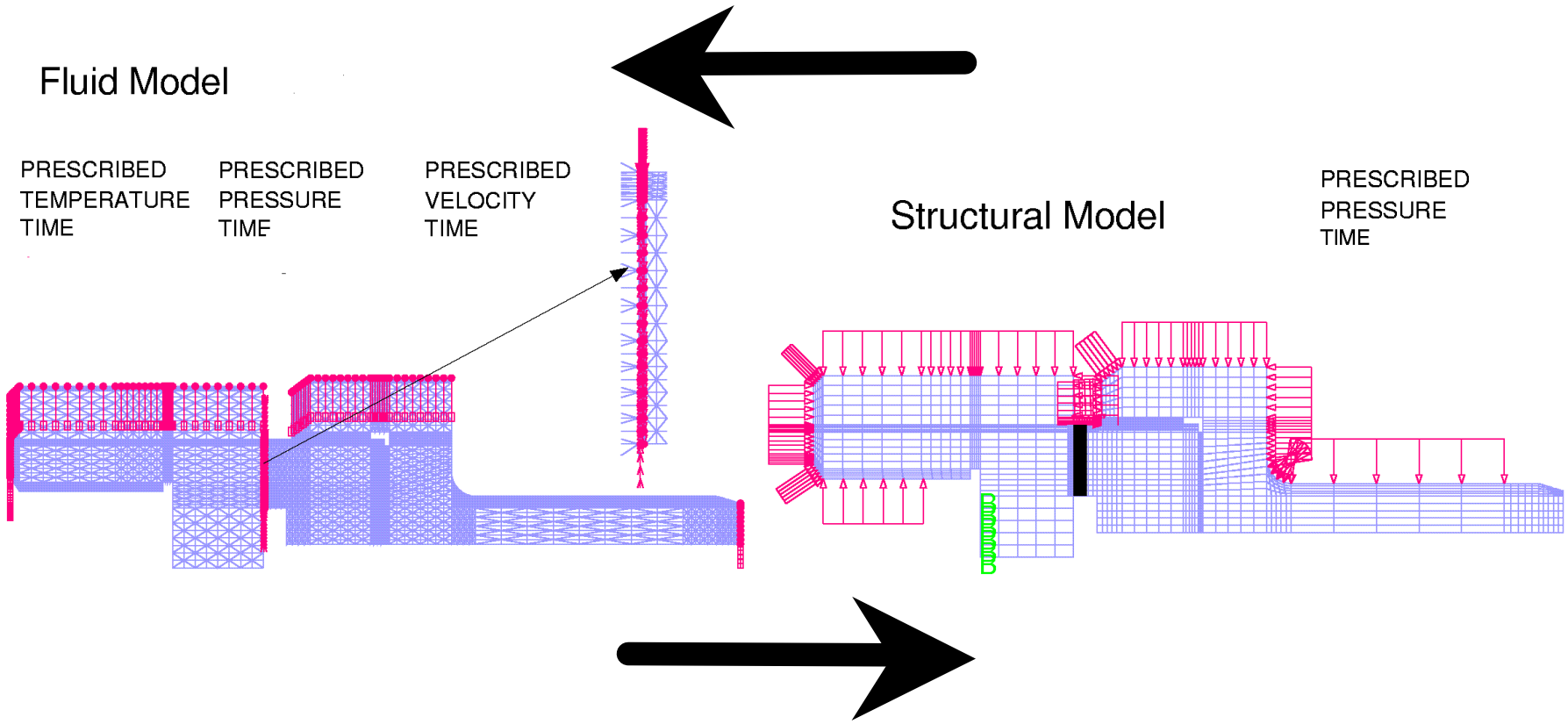

ANALYTICAL DEVELOPMENTS

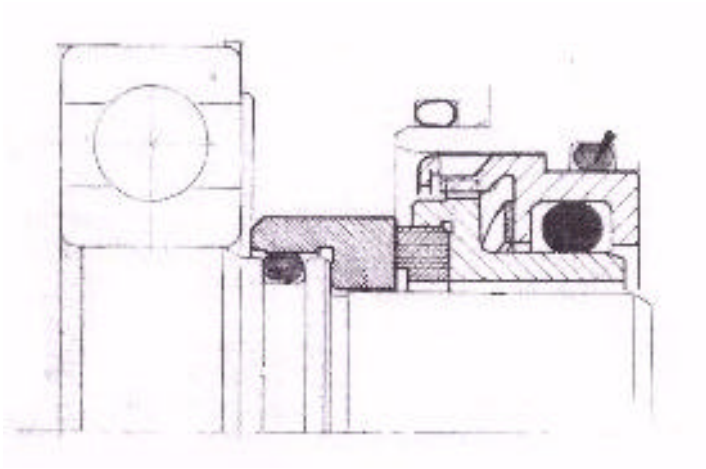

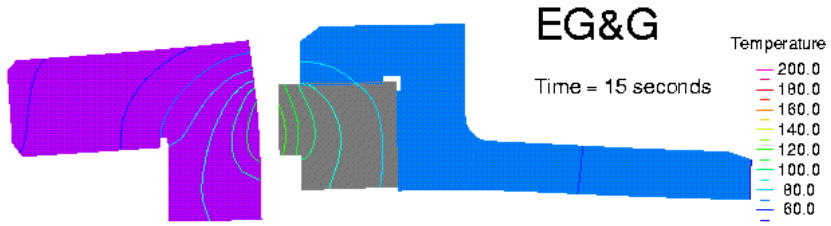

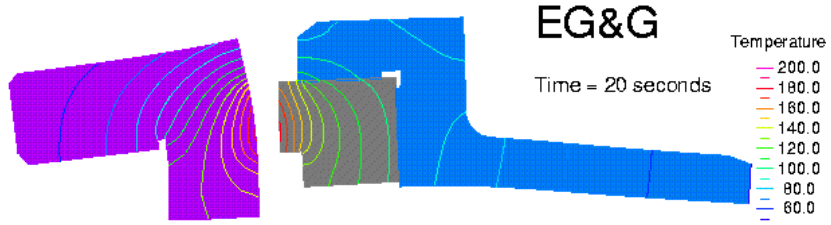

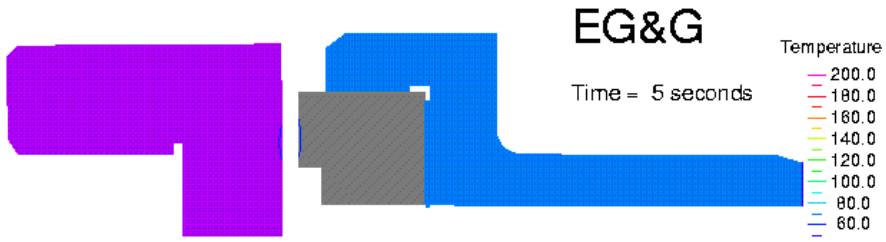

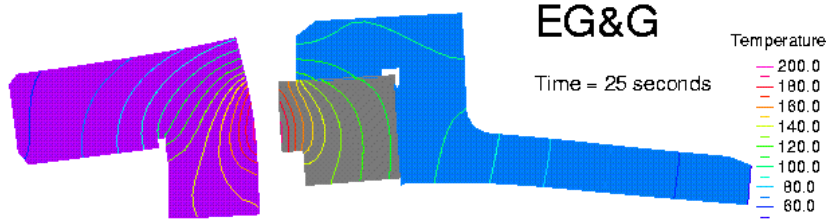

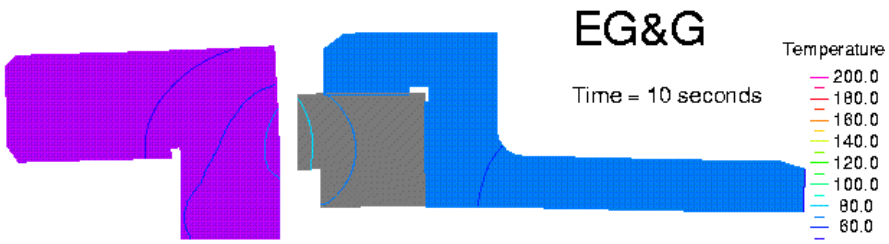

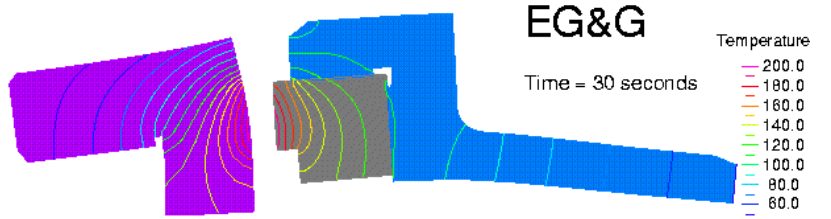

ANALYTICAL DEVELOPMENTS

- Face flatness and stability are critical for seal performance.
- Analytical techniques exist to model the behaviour of face seals.
- Face distortion can be minimised by design and selection of materials.
- Design / Analytical Optimization Significantly improves
- Seal Performance Design / Analytical Optimization Significantly improves Seal Performance

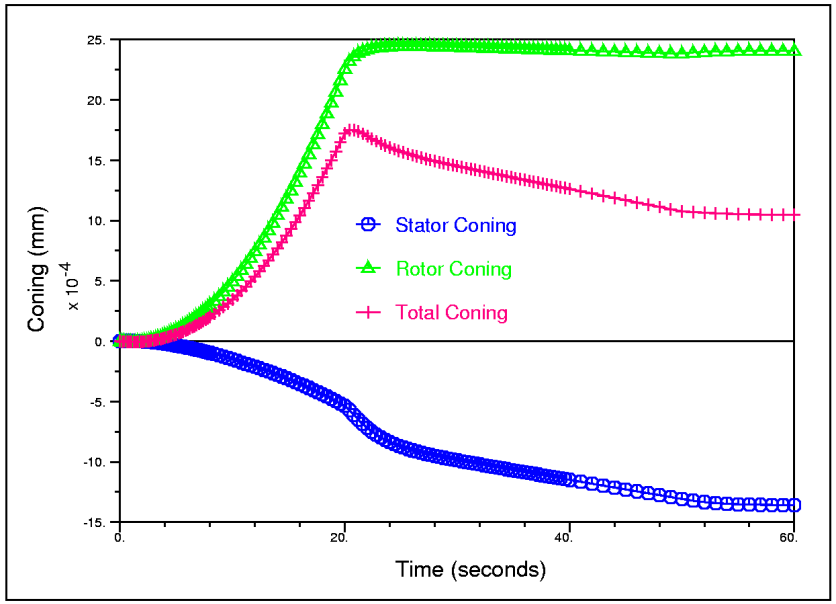

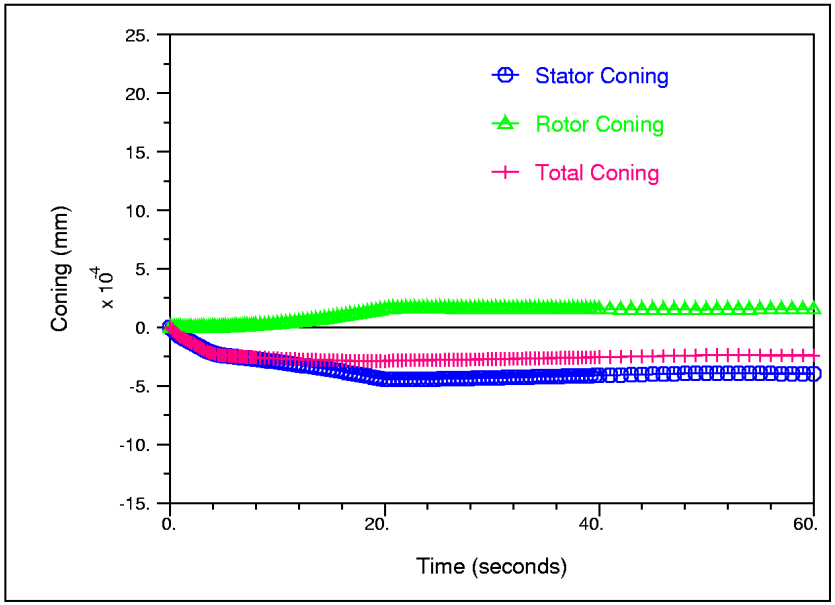

BELLOWS FACE SEAL DEVELOPMENT

- Historical Bellows Face Seal Problems
- Significant Manufacturing Challenges
  - Load Control
  - Balance Diameter Shift
  - Seal To Seal & Lot To Lot Variation
- Manufacturing Capability Critical to Success

$$MED = \sqrt{(\text{Bellows ID}^2 + \text{Bellows OD}^2) / 2}$$

$$\text{Balance Ratio (B) (ID Pressure)} = \frac{(MED^2 - \text{Face ID}^2)}{(\text{Face OD}^2 - \text{Face ID}^2)}$$

$$\text{Balance Ratio (B) (OD Pressure)} = \frac{(\text{Face OD}^2 - MED^2)}{(\text{Face OD}^2 - \text{Face ID}^2)}$$

$$\text{Face Load} = [\Delta P \times (B - K) \times \text{Face Area}] + \text{Spring Load}$$

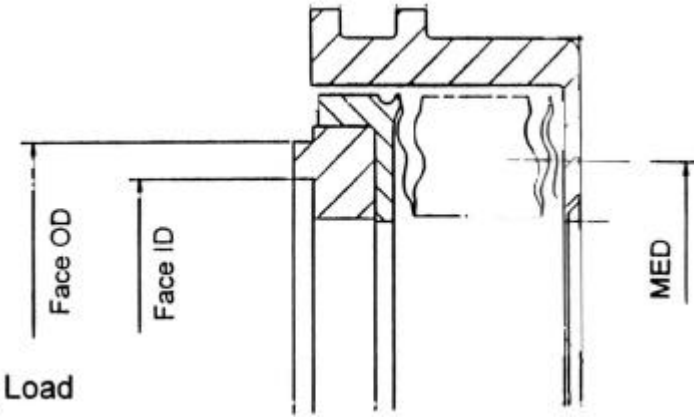

BELLOWS SEAL DEVELOPMENT

- Analytical Design Technique
  - FEA Optimization Tool Developed
  - CAM Manufacturing
- Bellows Cores Designed Specifically for each Application
- Minimized Part to Part Variation
- Proven Process
  - > 25 Designs Completed
  - Demonstrated Field Performance

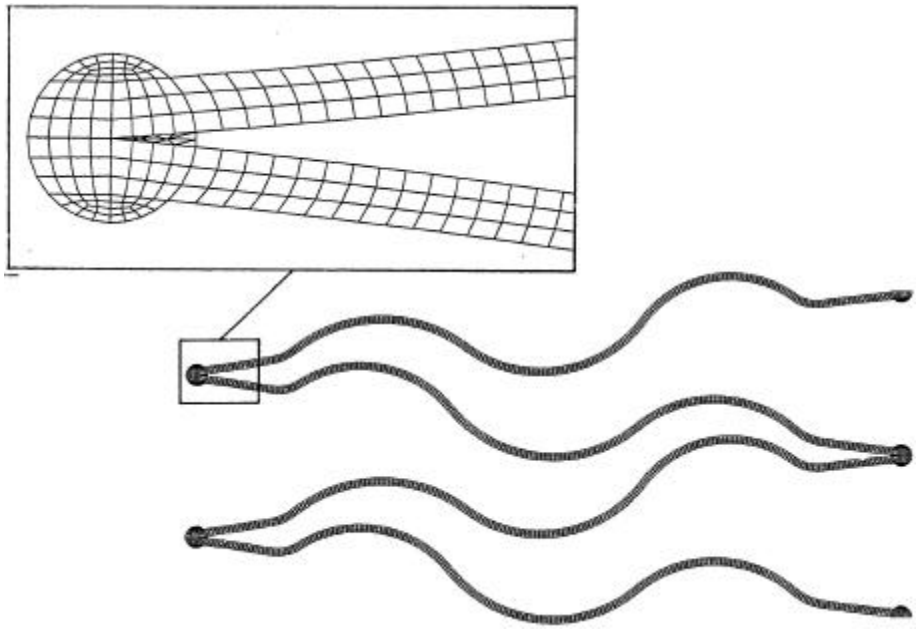

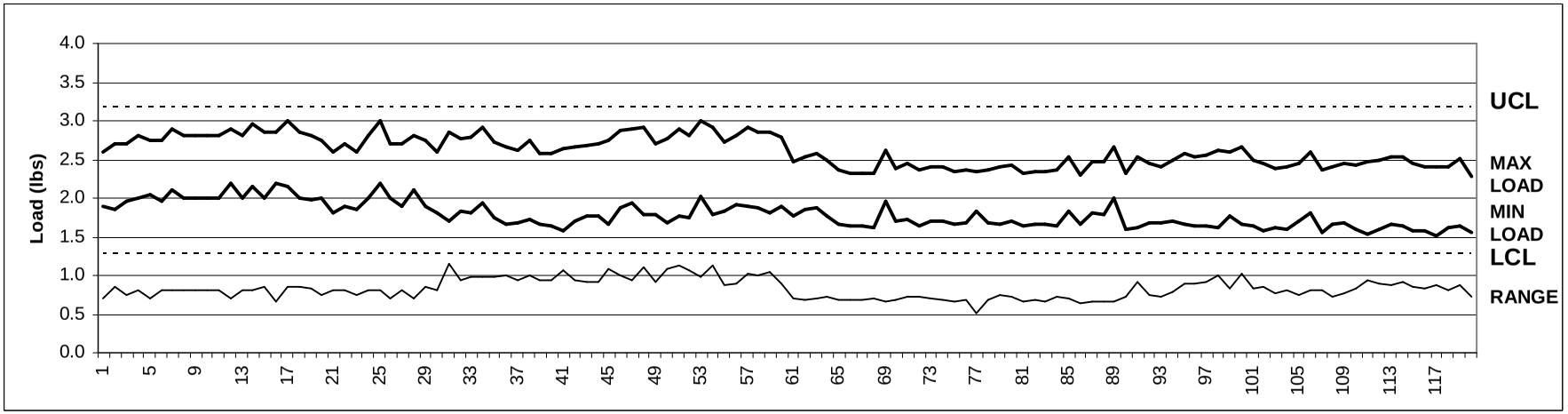

BRUSH SEAL DEVELOPMENT

- Single Stage Technology Platform Established
  - AIAA 99-2683 - Development of Low Hysteresis Brush Seal For Modern Engine Applications
- Extensive Component Qualification Programs Completed
- High Temperature Development Program Through 2000
  - ATS Program with Siemens Westinghouse
- Turbine Rim Seal Development
- Performance Characterization
  - Pressure Effect of Bristle Stiffness
  - Measurement Technique

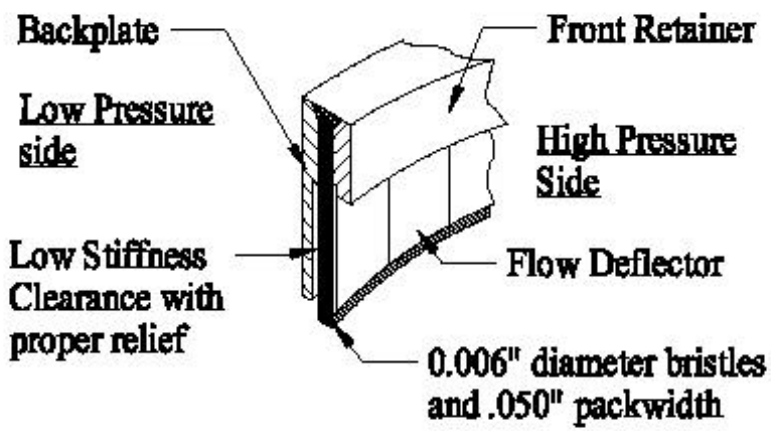

- Ongoing Emphasis on Manufacturing

HYDRODYNAMIC FACE SEAL

- 10+ Years Industrial Seal Experience
- Developed for Axial Air / Oil Seals for Aerospace
  - Small Gas Turbine Mainshaft
  - Accessory Gearbox
  - AIAA 99-2822 - Development of Liftoff Seal Technology for Air/Oil Axial Sealing Applications
- GAS6b Design Code
  - Modified For Dynamic Tracking
  - Integrated FEA Capability

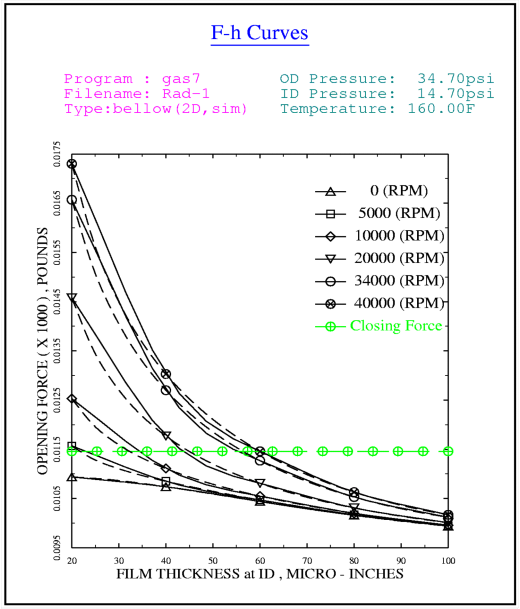

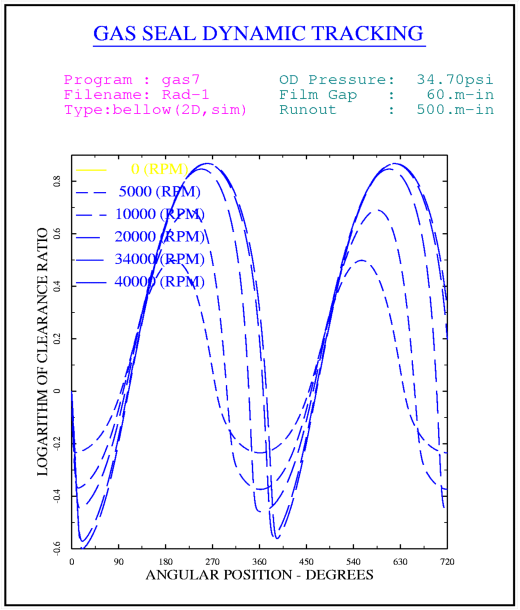

HYDRODYNAMIC FACE SEAL

- Design Code Validation Ongoing
- Characterization Program in Process
- Application Specific Test Programs

Lift Off

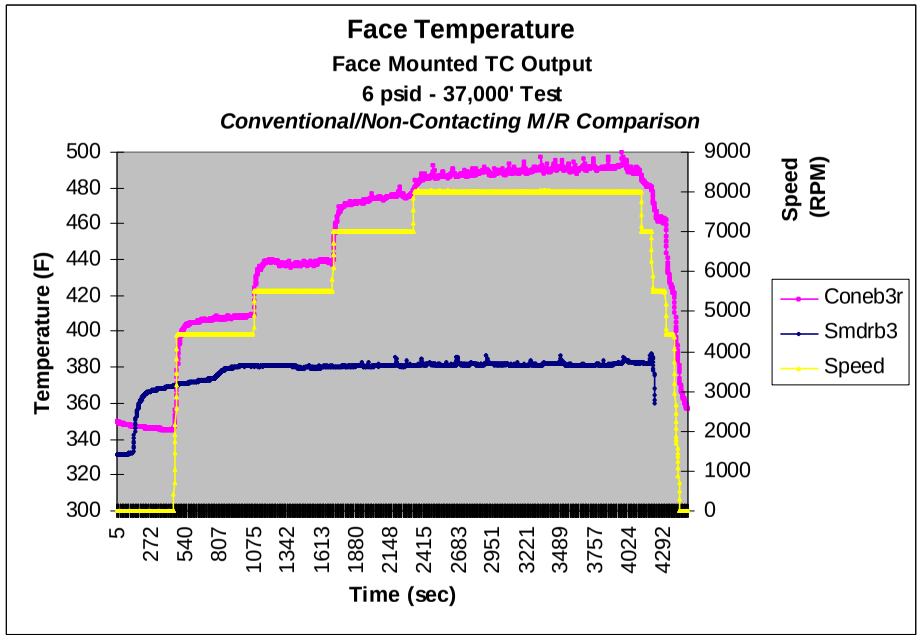

Air Leakage

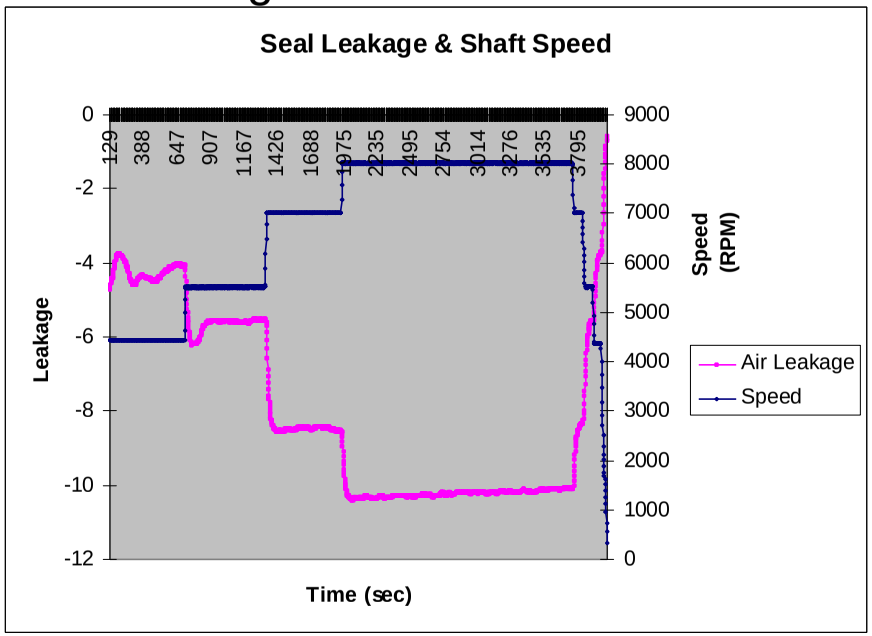

ADVANCED HYDRODYNAMIC FACE SEAL

- High Speed, High Temperature Air Seal
  - Joint Development: RR Allison, USAF
- AIAA 99-2684 - Development of a High Speed, High Temperature Compressor Discharge Seal
- Revised Design based on Initial Test
- Program Ongoing Through 2000
  - Design Optimization Based on Initial Testing
  - Tribology Testing

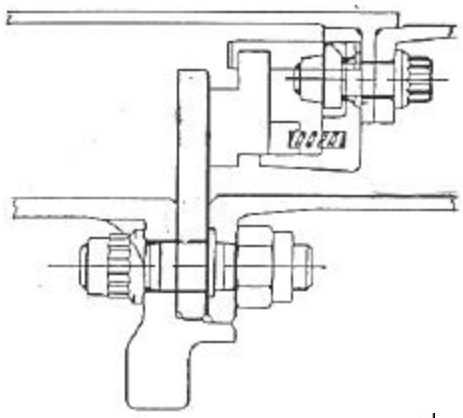

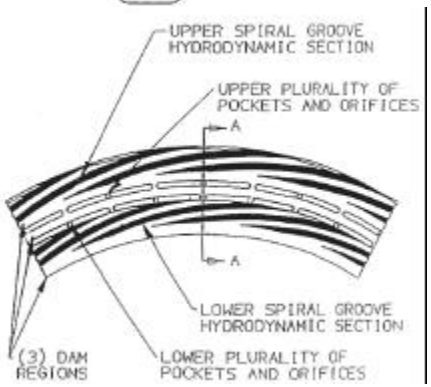

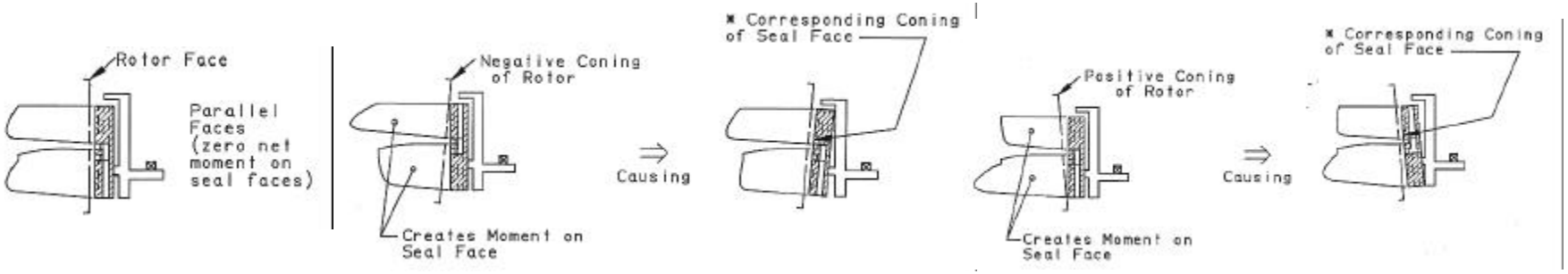

MICRO-MECHANICAL SEAL

- Developed for Specific Gearbox ‘Problem’ Applications
- Reduced Axial / Radial Space Requirement
- Retro Fit Capability

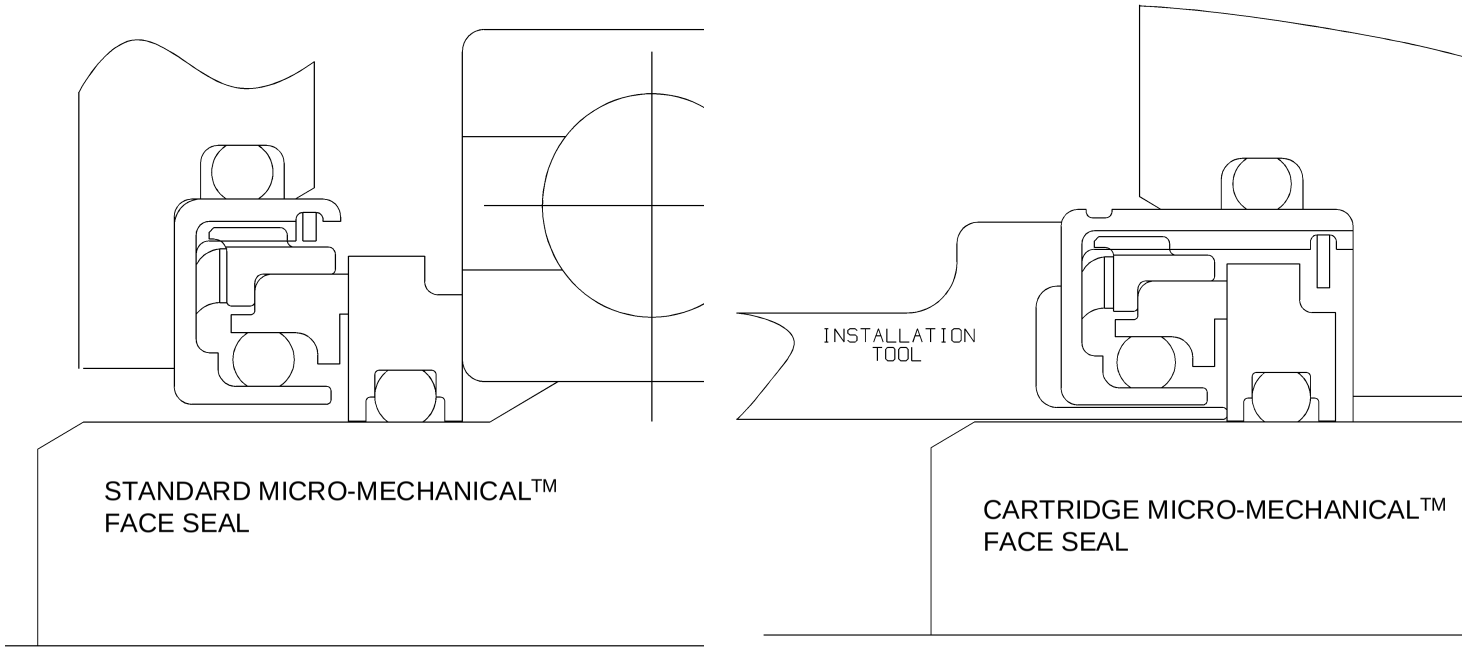

MATERIALS DEVELOPMENT

- Full Time Materials Engineering + Technician
- Comprehensive Material Characterization Program Ongoing
  - Collaborative with OEM's
- Generate Performance Characteristics Database:
  - Existing 'Traditional' Tribopairs
  - 'New' Tribopairs

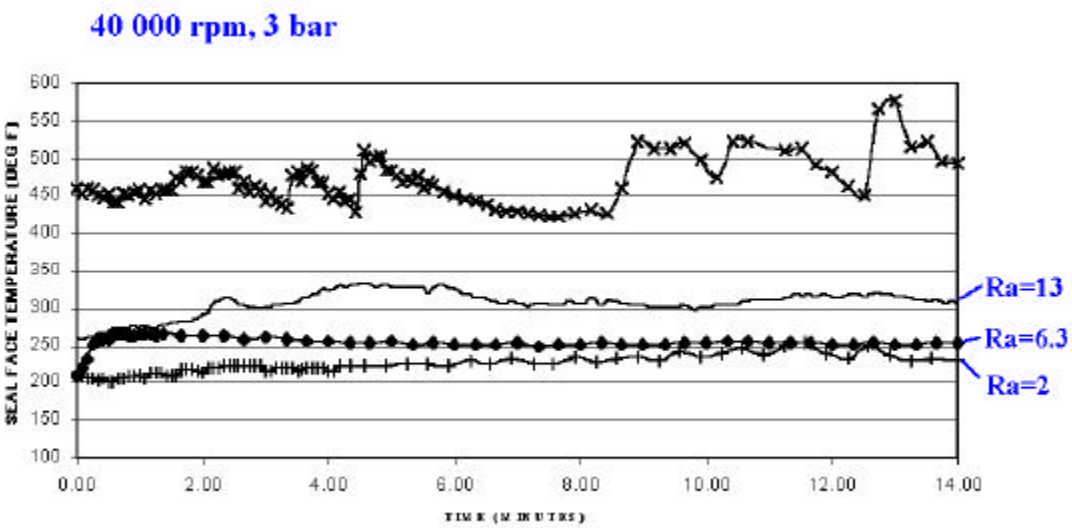

IN SUMMARY……

- Significant Organizational Changes Over recent months
  - Name Change
  - Product Development Engineering Structure
- Multiple Dynamic Seal Product Platforms
- Committed to New Product Development
- Excellent Engineering & Technical Support Capability
- Committed to building Technical Relationships