CHALLENGES IN HYDROGEN SEALING FOR GENERATORS

Bharat Bagepalli, Mahmut Aksit, and Rob Mayer
General Electric Company
Schenectady, New York

Hydrogen Sealing System for a Generator

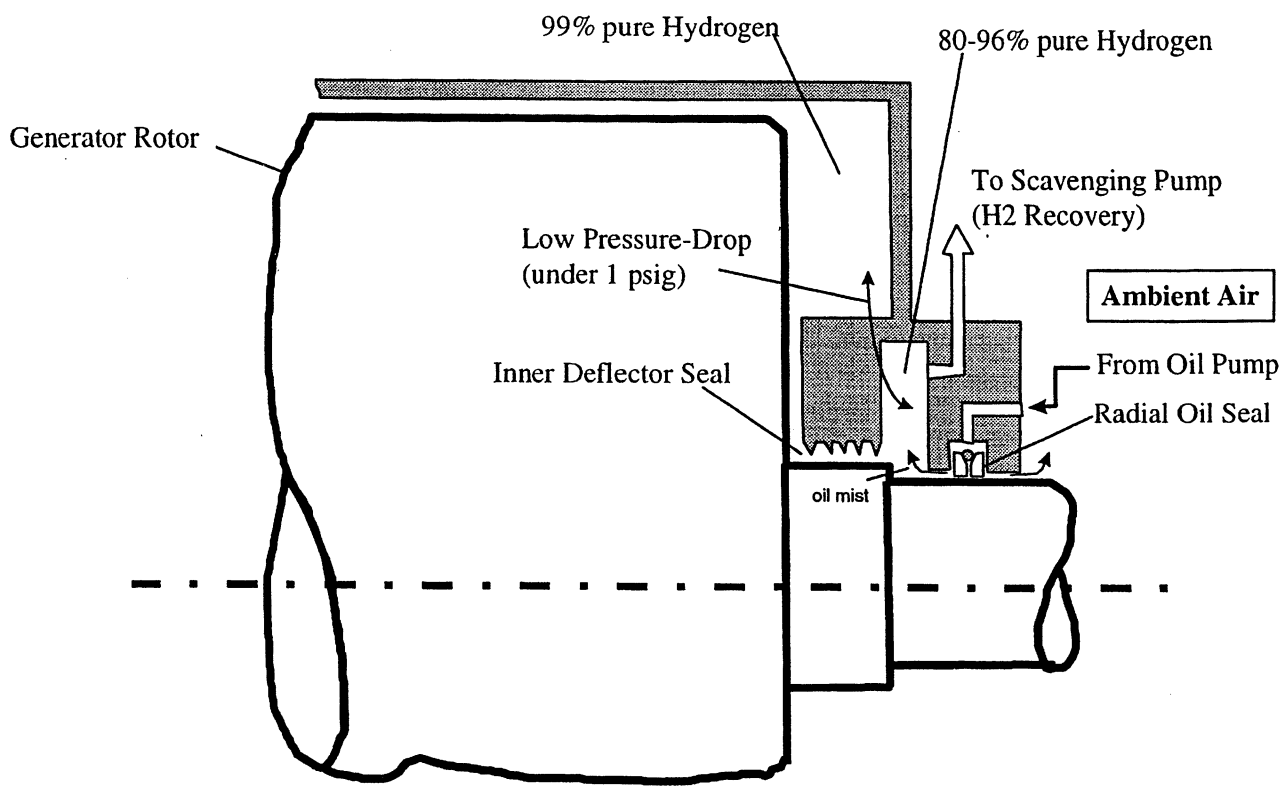

Why Hydrogen ?

- Hydrogen has seven times the heat-extraction capacity of air.
- Use of hydrogen for cooling large turbo-generators substantially reduces their size - compared with using air.

Major Issues and Challenges

- At 30-75% concentration, hydrogen in air is explosive.
- Secondary sealing system needs to perform in an oil-mist + hydrogen environment.
- Sealing must occur under low pressure-drop and diffustion conditions.
- Generators need to be contiually replenised with hydrogen to compensate for consumption.
- Hydrogen may not be easily available in remote areas, and with overseas customers - some are forced to build an auxiliary H2 plant nearby for this.
- Handling hydrogen is not as simple as air.

Objectives

- Reduce H2 consumption by 50%.
- Oil-seal management: reducing H2 consumption requires simultaneous reduction of oil flow to maintain H2 concentration in Scavenging Chamber above explosive levels.

Approach

- Use Brush Seals.
- Reduce oil flow requirement: use a smaller pump.

Identifying Sources of Hydrogen Consumption

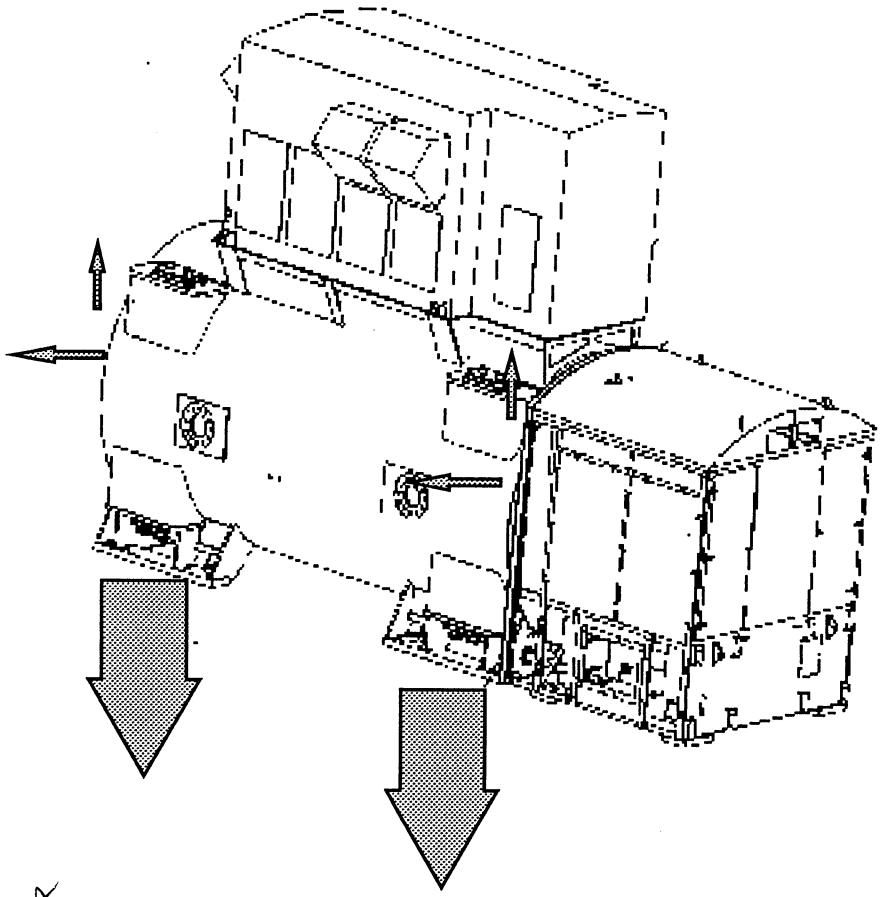

Major Components:

Oil Flow
(hydrogen dissolved in sealing oil)

Frame Leakage
(tiny weld inperfections, imperfect joint sealing)

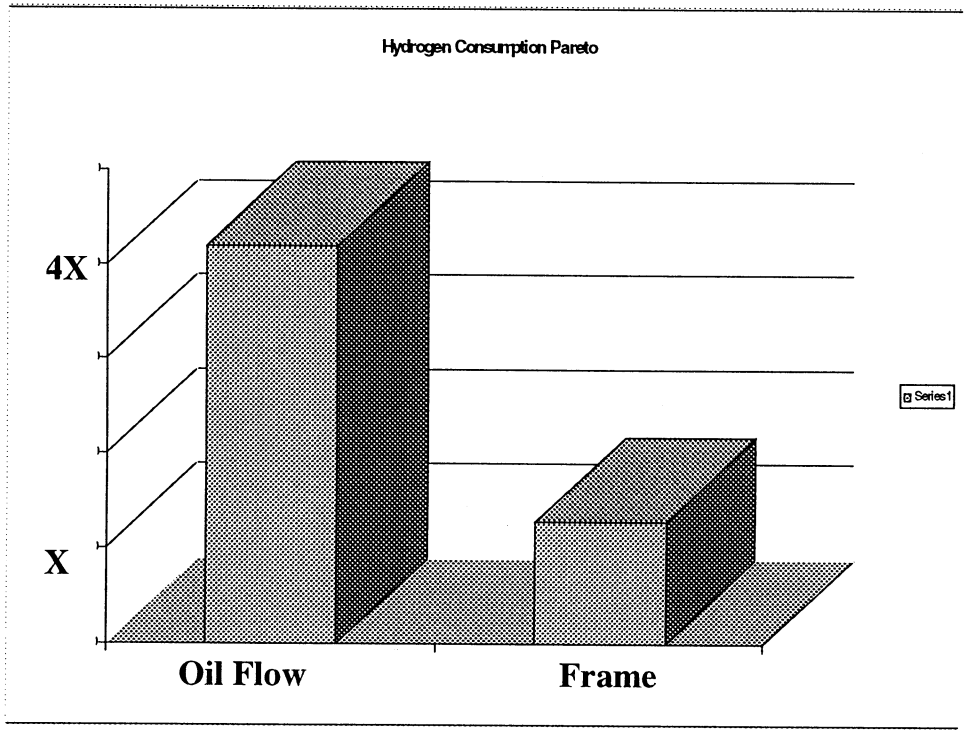

30" DIA Journal

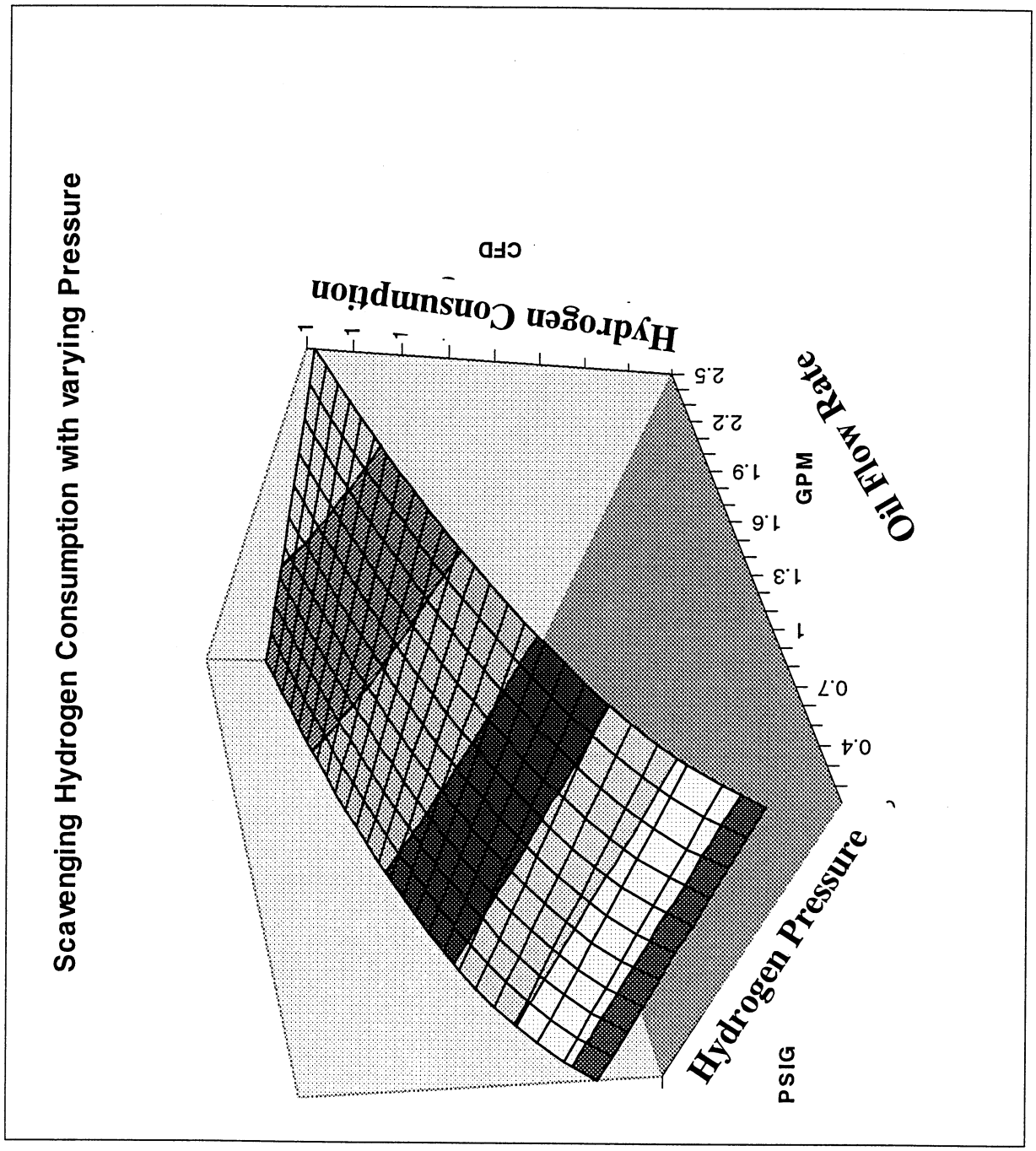
Scavenging Hydrogen Consumption with varying Pressure
Hydrogen Consumption
CFD
Hydrogen Pressure
PSIG
Oil Flow Rate
GPM
0.4
0.7
1
1.3
1.6
1.9
2.2
2.5

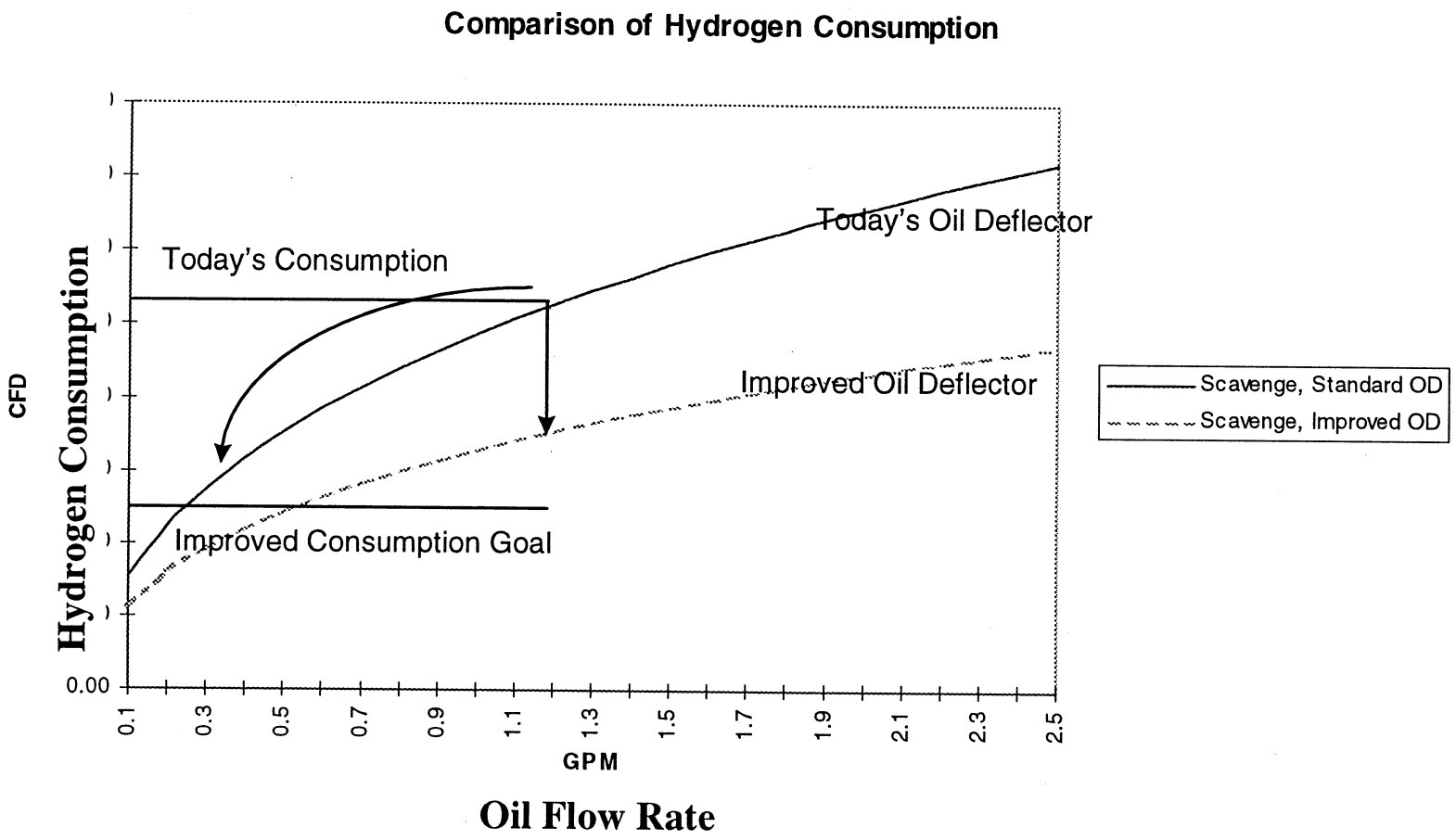
Comparison of Hydrogen Consumption
Hydrogen Consumption
CFD
0.00
Today's Consumption
Today's Oil Deflector
Improved Oil Deflector
Improved Consumption Goal
Scavenge, Standard OD
Scavenge, Improved OD
0.1
0.3
0.5
0.7
0.9
1.1
1.3
1.5
1.7
1.9
2.1
2.3
2.5
GPM
Oil Flow Rate
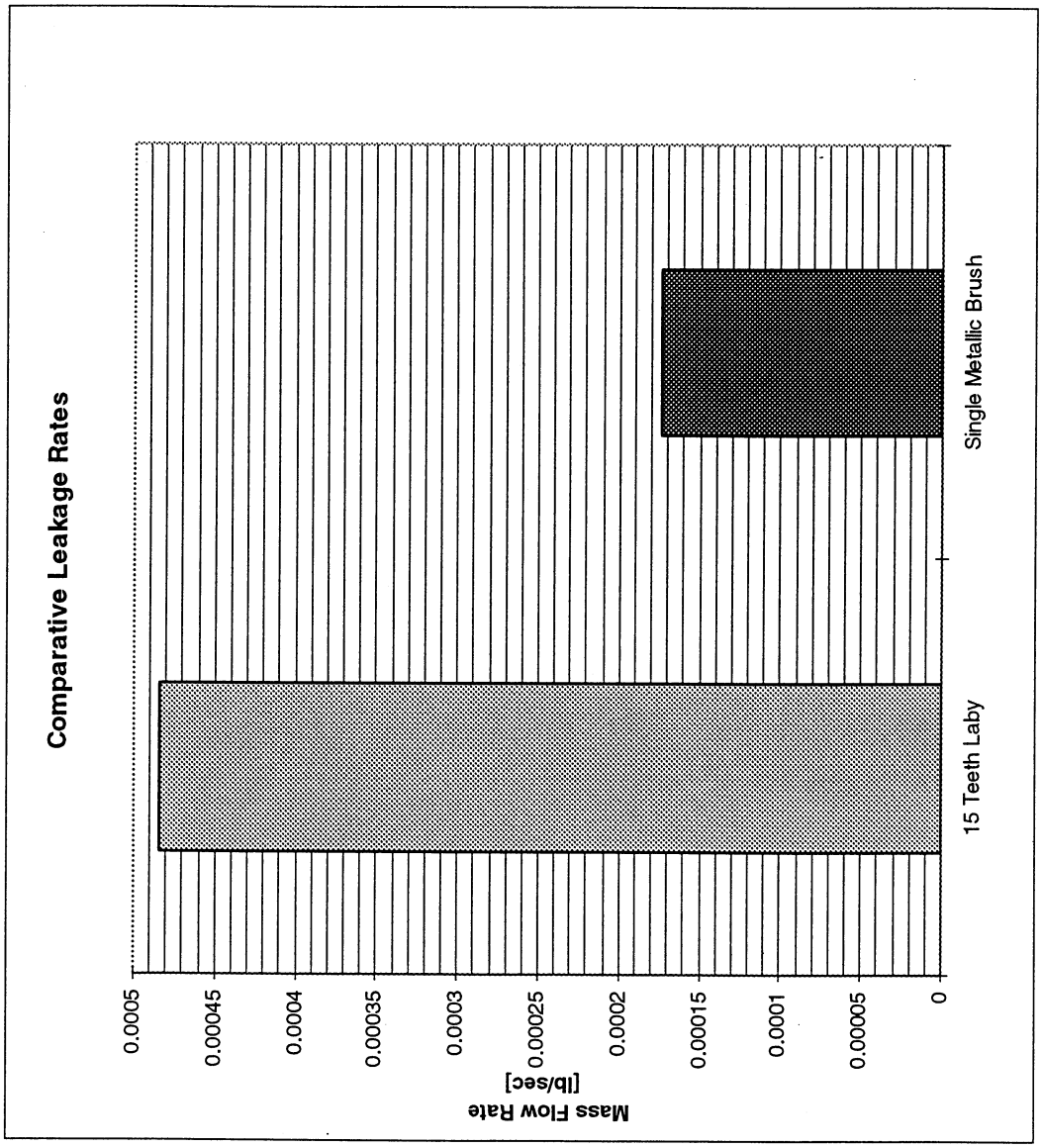
Preliminary results: 15-Tooth Laby vs. Brush