SEAL DEVELOPMENT AT STEIN SEAL COMPANY

Alan D. McNickle
Stein Seal Company
Kulpsville, Pennsylvania

# Outline

## Seal Development Programs

- Hydrodynamic Circumferential Seals
  - Gas Seals
  - Oil Seals
- Hydrostatic Face Seals
  - Aspirating Seal
  - Stepped Face Seal
- Intershaft Seals
  - Hydrostatic Face Seal

# Hydrodynamic Circumferential Seal Development

- Gas Seals
  - Aerospace Gas Turbine Applications
    - » High Pressure & High Speed
- Oil Seals
  - Land Based Gas Turbine Applications
    - » Generators

# Hydrodynamic Circumferential Seals
## Gas Seals
### Program Goals

- Increase Pressure Differential Capability
- Increase Seal Wear Life
- Increase Seal Operating Speed
- Expand Circumferential Seal Applications

# Hydrodynamic Circumferential Seals
# Gas Seals
## Operating Conditions

**Current Technology**

(non-simultaneous conditions)

- Shaft Speed: 465 ft./sec.
- Press. Diff.: 85 psid
- Air temp.: 850 $^{o}$F
- Leakage: < 1.5 SCFM
- Seal Life: <10,000 hours

**Hydrodynamic Circumferential Seal**

- Shaft Speed: 600 ft./sec.
- Press. Diff.: 100 psid
- Air temp.: 750 $^{o}$F
- Leakage: < 3.0 SCFM
- Seal Life: >20,000 hours

# Hydrodynamic Gas Seal

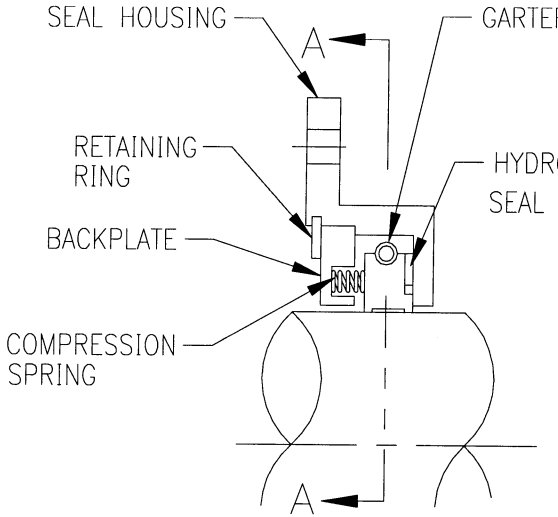


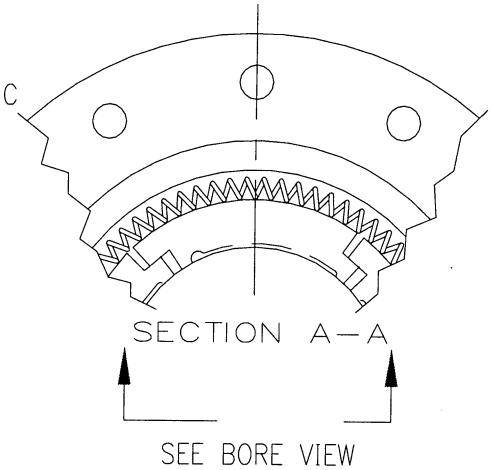


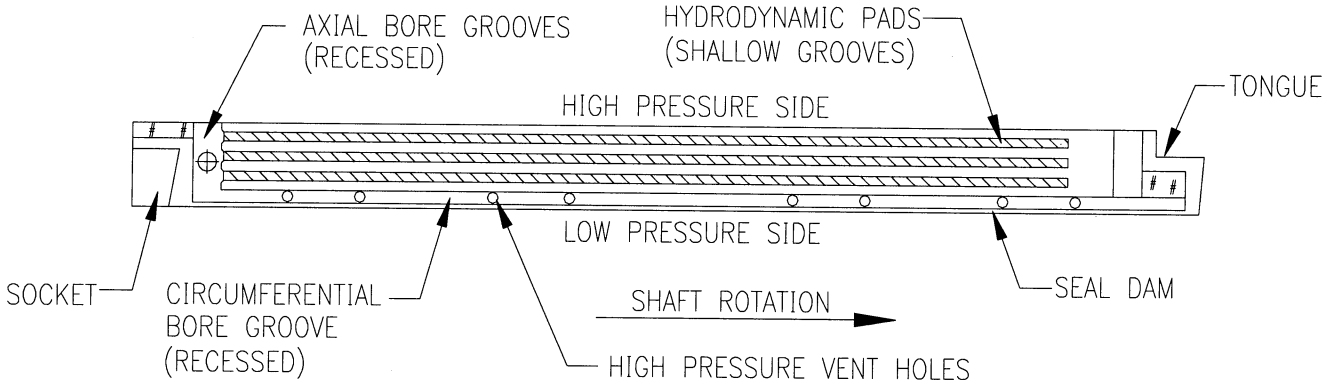


BORE VIEW

US Patent Pending

HYDRODYNAMIC SEAL ASSEMBLY
WITH LIFT POCKETS

H–D ASSY.DWG

# Hydrodynamic Gas Seal

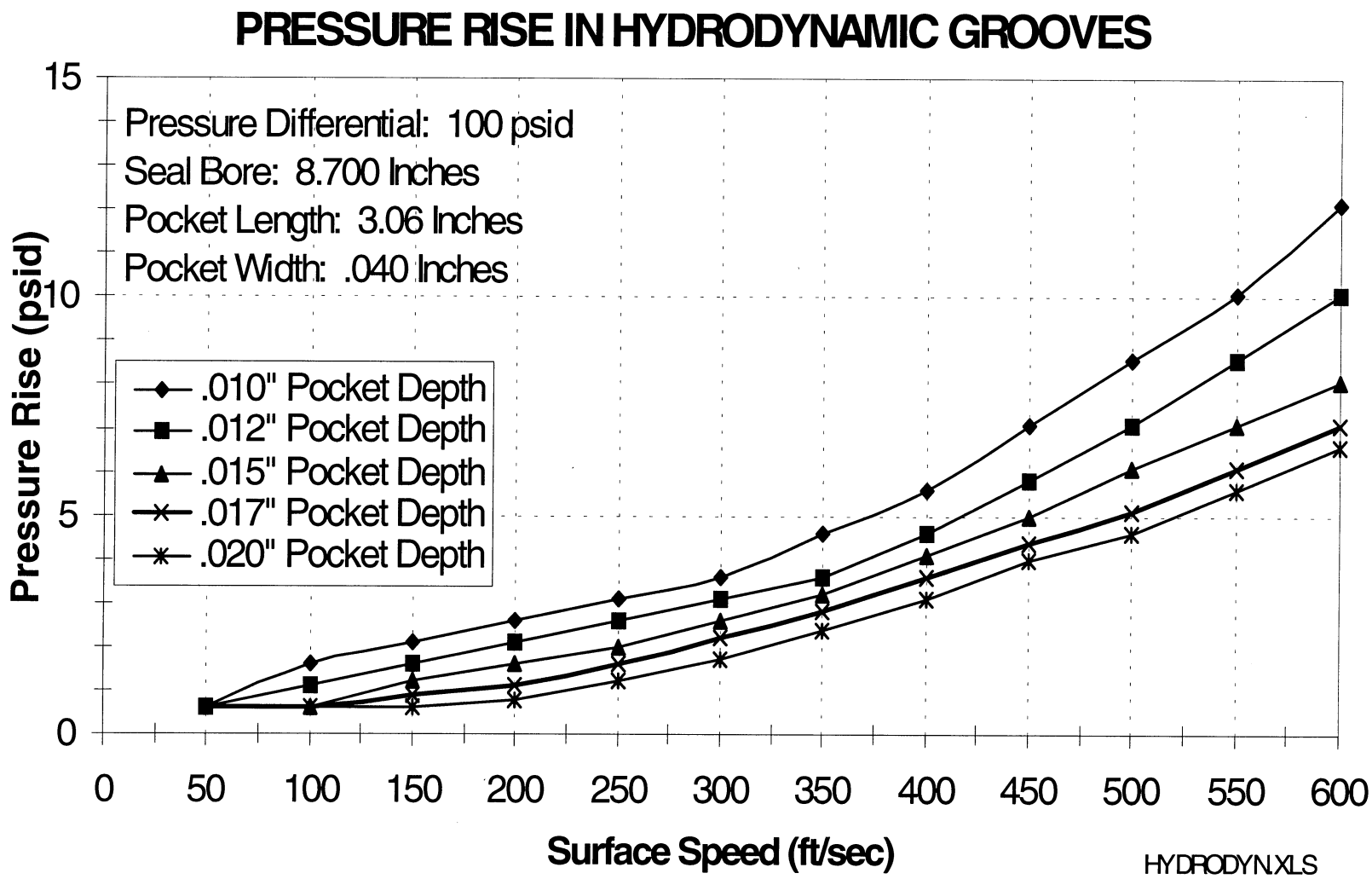

# Hydrodynamic Gas Seal
## Dynamic Test Rig

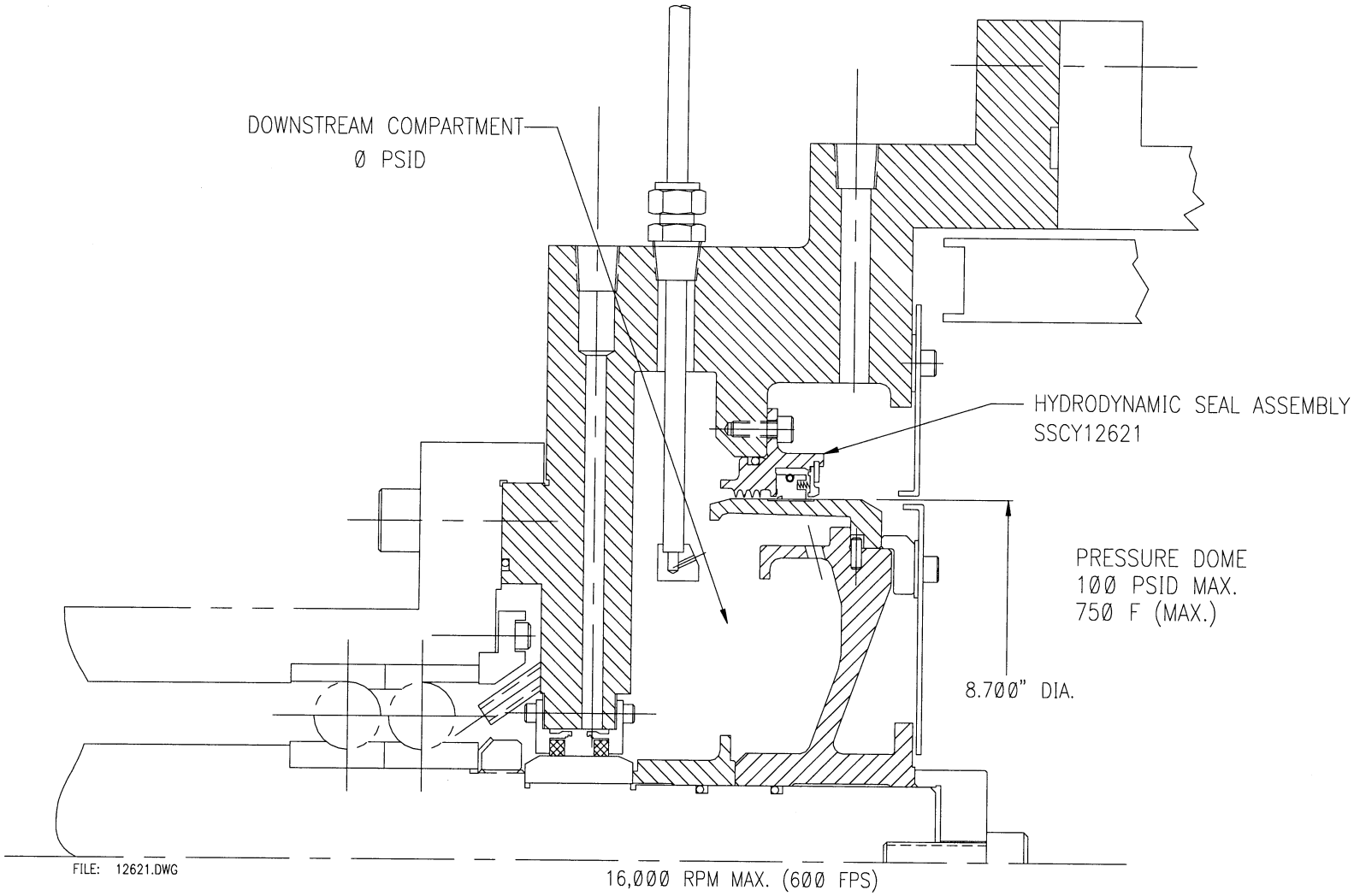

# Dynamic Rig Test Results

## Seal Ring Temperature vs. Shaft Speed

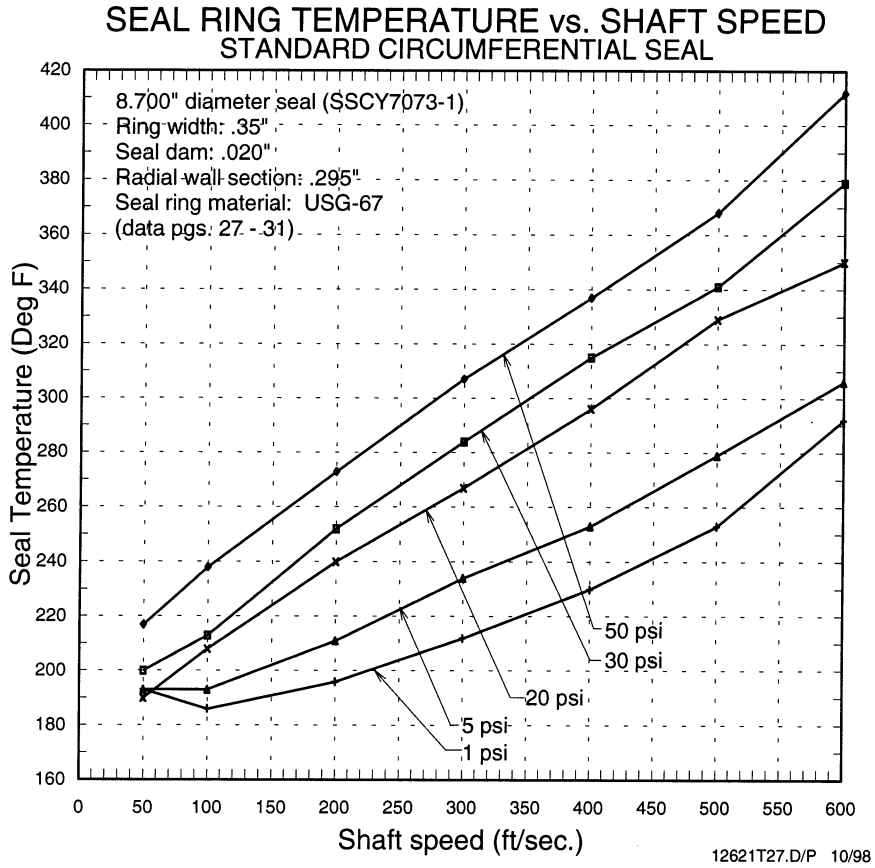


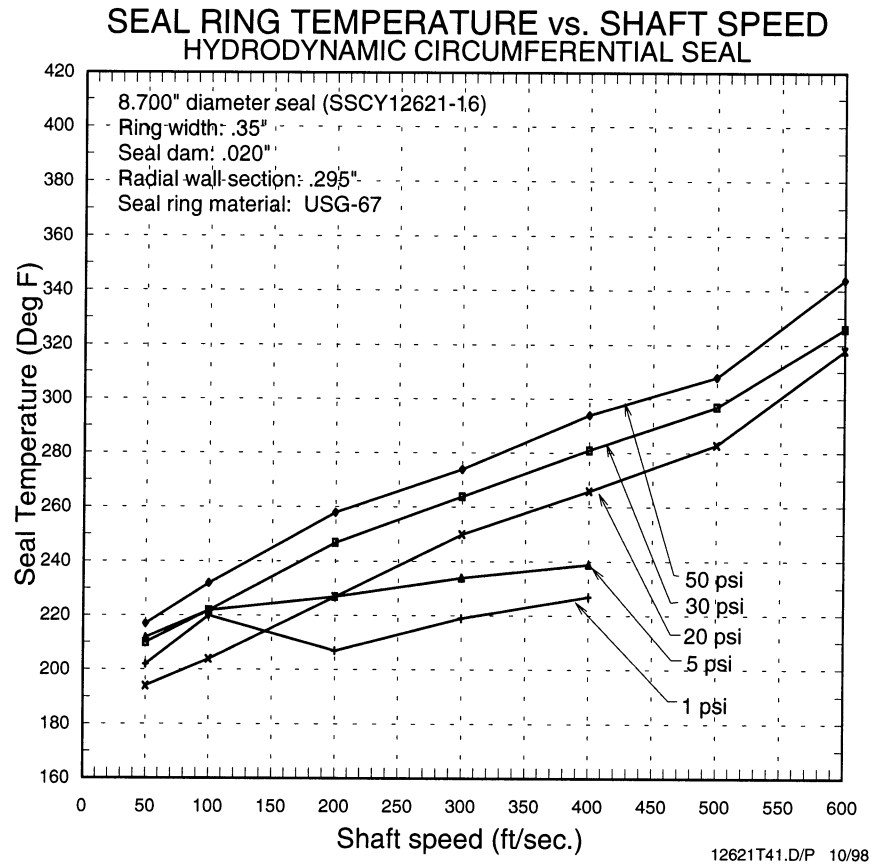

# Dynamic Rig Test Results

## Seal Leakage vs. Pressure Differential

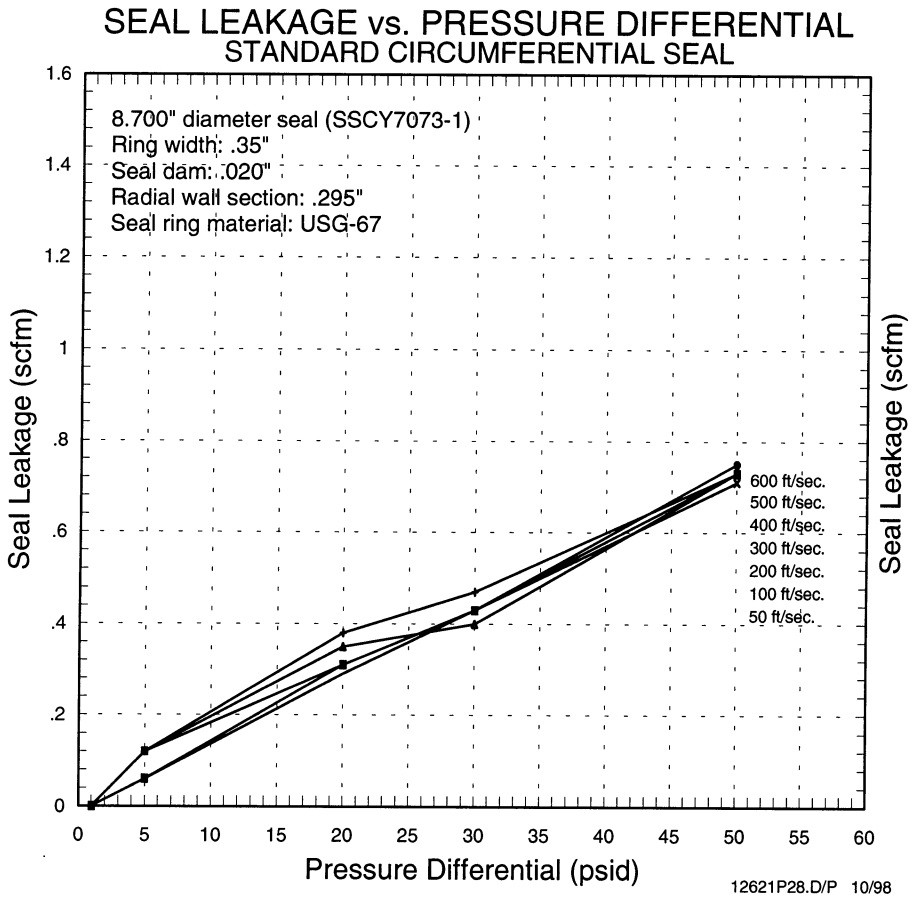


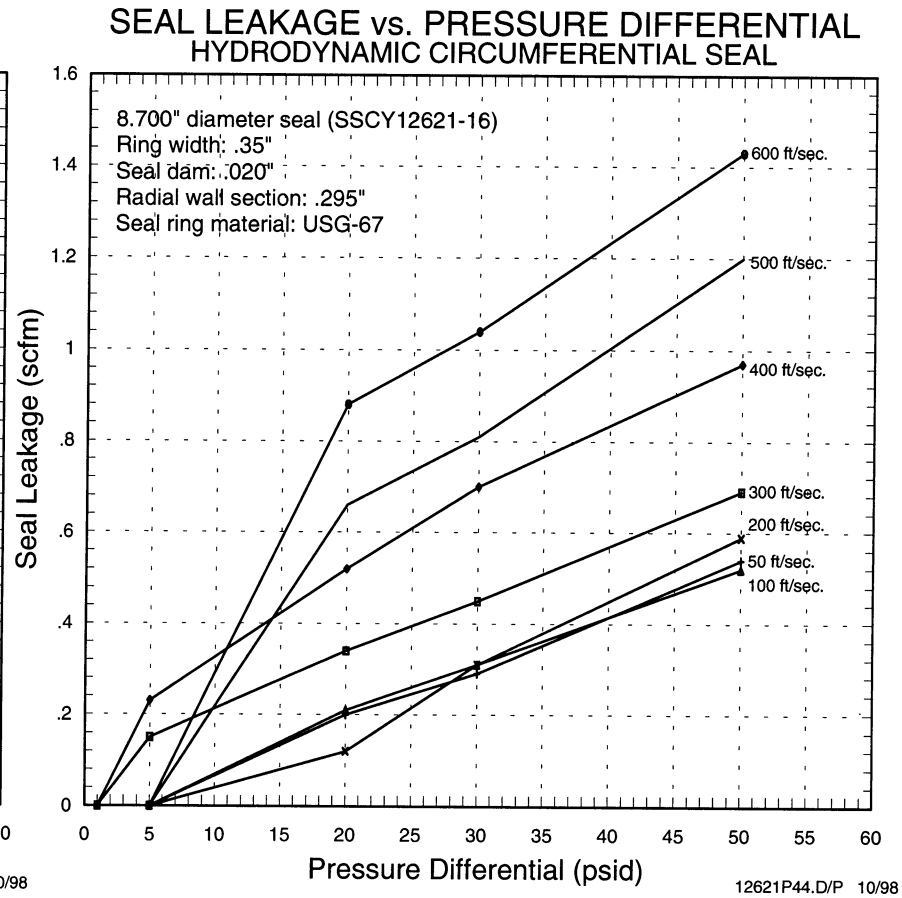

# Dynamic Test Results - Endurance Test

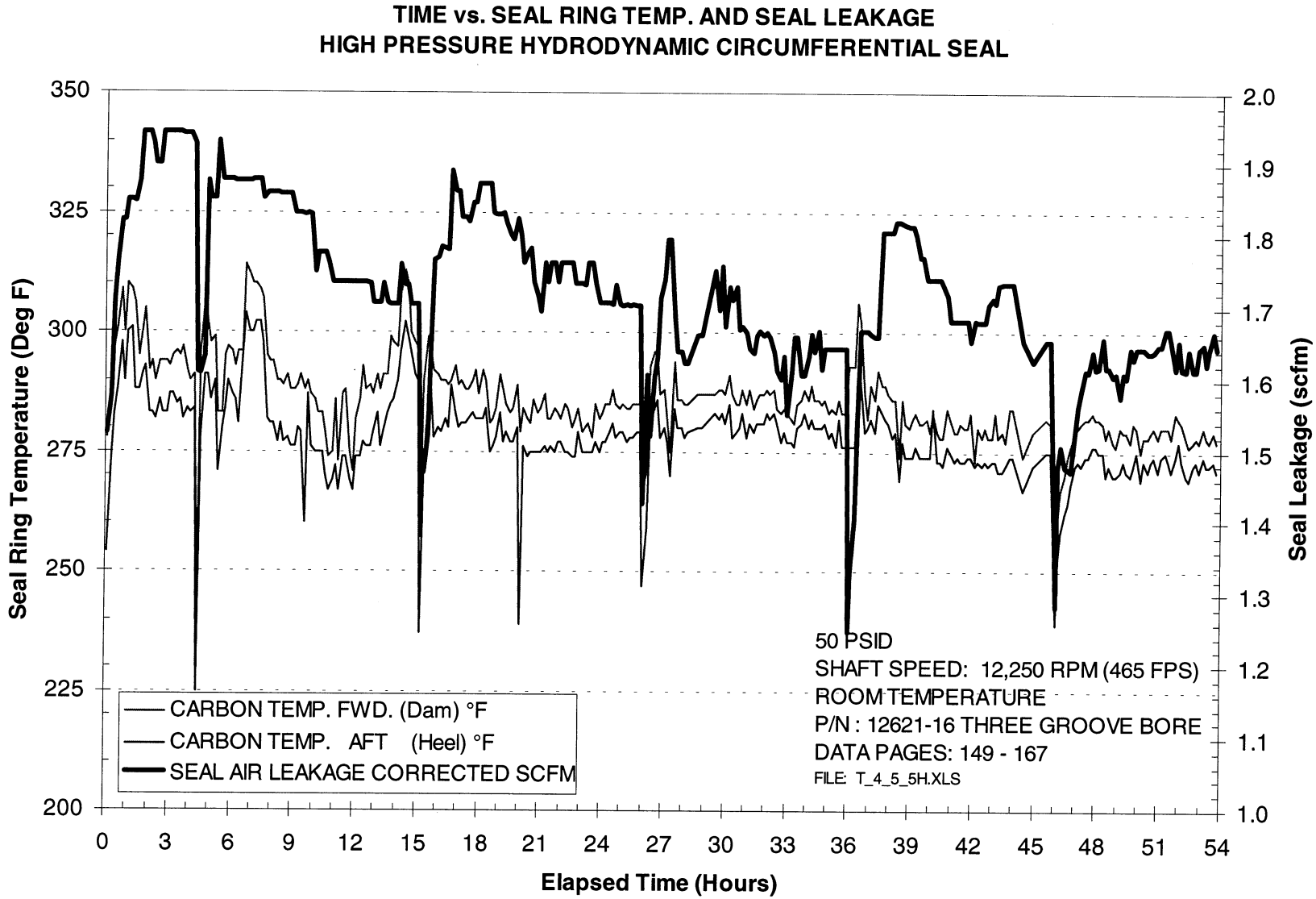

# Hydrodynamic Gas Seal Photo

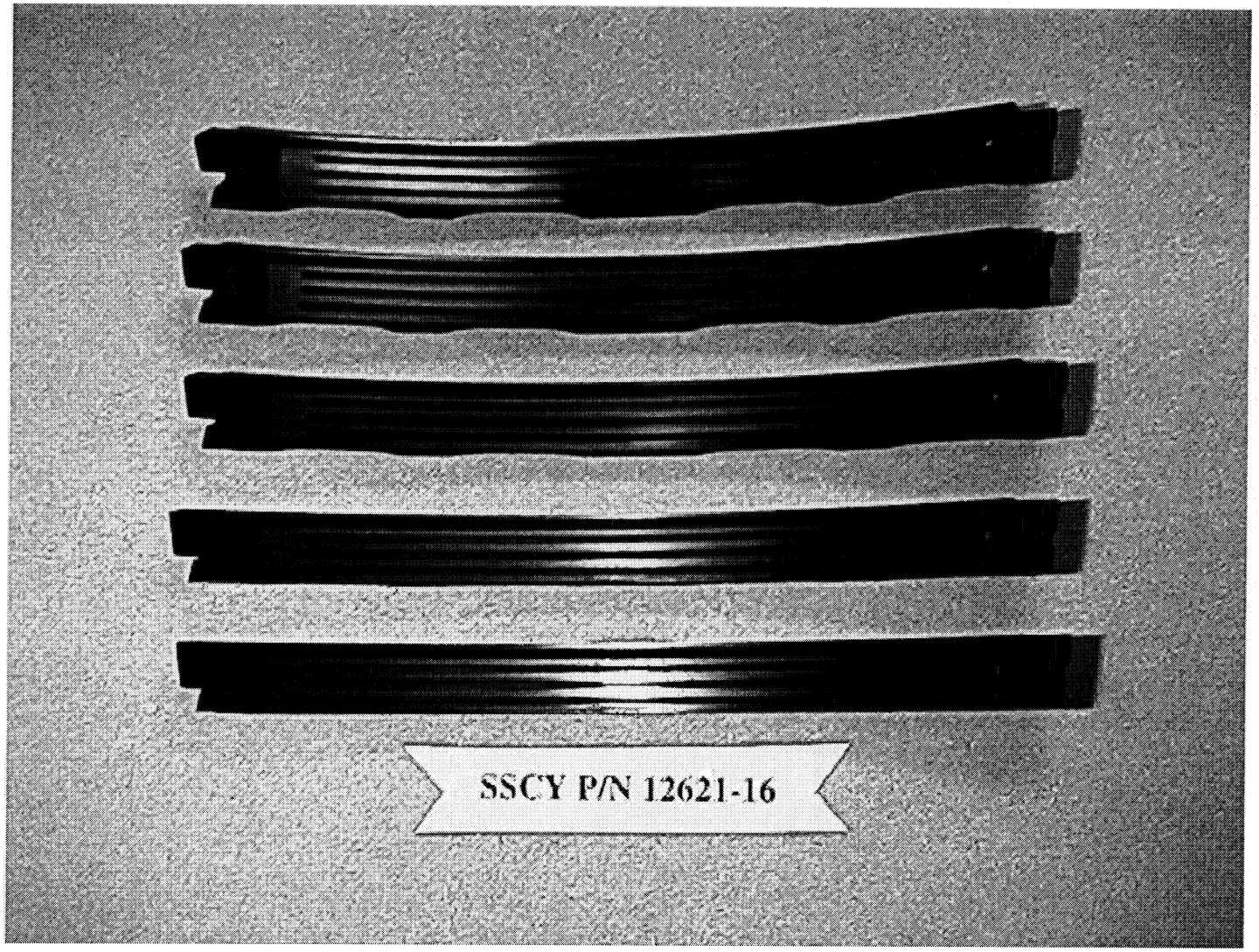

# Hydrodynamic Gas Seal
## Test Results - Wear Life Summary

| Test Condition | Seal Type | |
|---|---|---|
| | Hydrodynamic (Gas) | Hydrodynamic (Steam) |
| Shaft Speed (rpm) | 13,350 | 3,600 |
| PLV (ft/sec) | 510 | 188 |
| ΔP (psid) | 50 | 20 |
| ΔT (Deg F) | 450 | 500 |
| Elasped Time (hours) | 160 | 174 |
| **Estimated Life (hours)** | **> 40,000** | **30,250** |

# Hydrodynamic Circumferential Seals
# Oil Seals
## Program Goals

- Control Oil Leakage at Varied Pressures
- Seal Bearing Oil in Generators
  - Replace Generator Gland Seals
- Provide Long Seal Life (> 50,000 hours)
- Provide Gas Sealing during "Failure" Mode

# Hydrodynamic Circumferential Seals
# Oil Seals
## Operating Conditions

### Hydrovent™* Seal

- Shaft Speed: 365 ft./sec.
- Press. Diff.: <85 psid
- Oil Temp.: 120 °F
- Leakage: Controlled (< 30 gal/hr)
- Seal Life: 50,000 hours

* A trademark of the Stein Seal Company, Kulpsville, PA
US Patent # 5,558,341

# Hydrovent™ Oil Seal

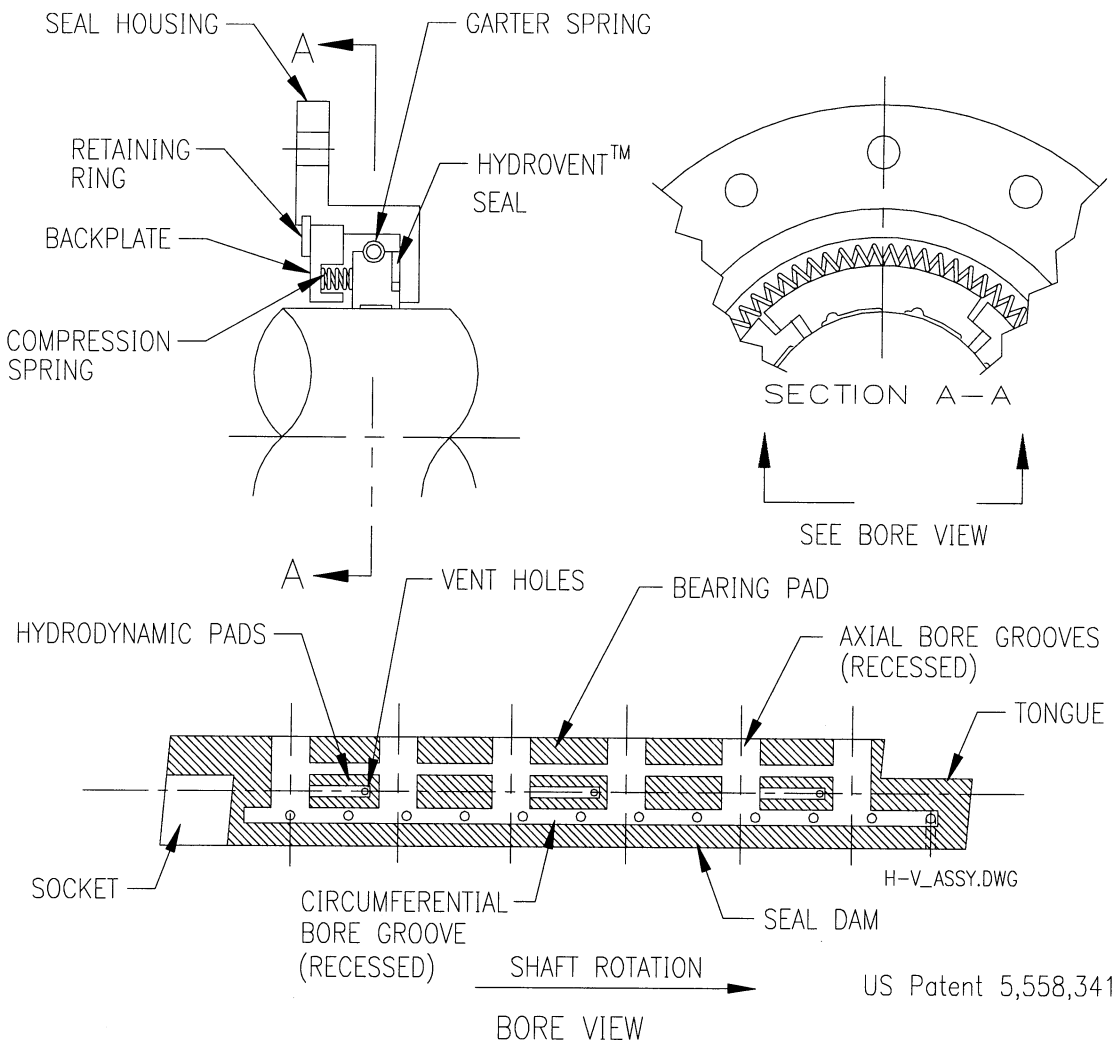


US Patent 5,558,341

HYDROVENT™ SEAL WITH LIFT POCKETS

# Force Diagrams
## Oil Seals

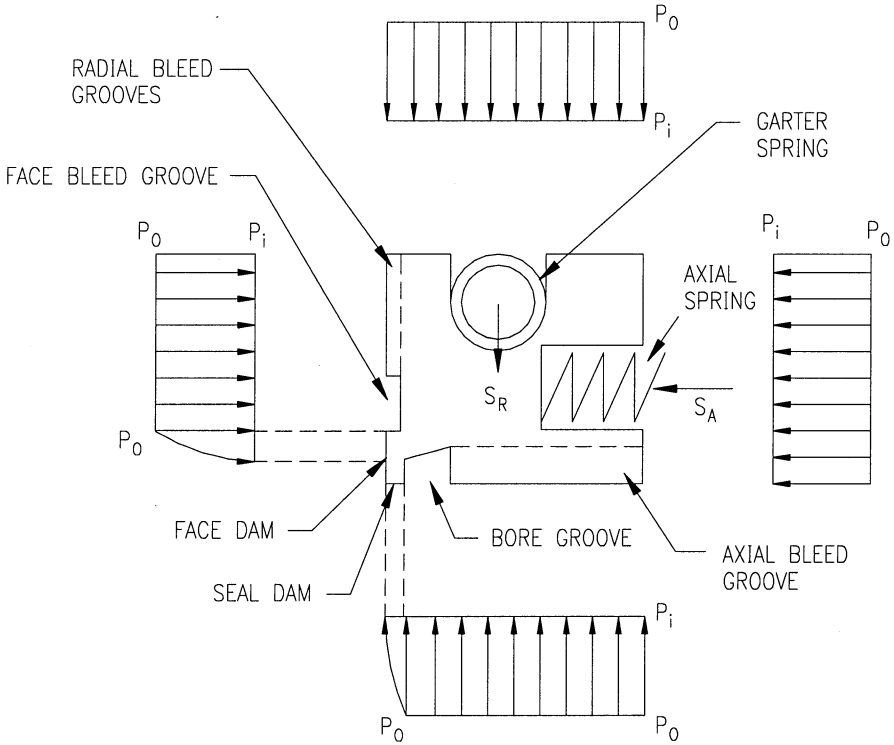


$P_o$ = PRESSURE, UPSTREAM
$P_i$ = PRESSURE, DOWNSTREAM
$S_A$ = SPRING LOAD, AXIAL
$S_R$ = SPRING LOAD, RADIAL

FORCE DIAGRAM
CIRCUMFERENTIAL SEAL

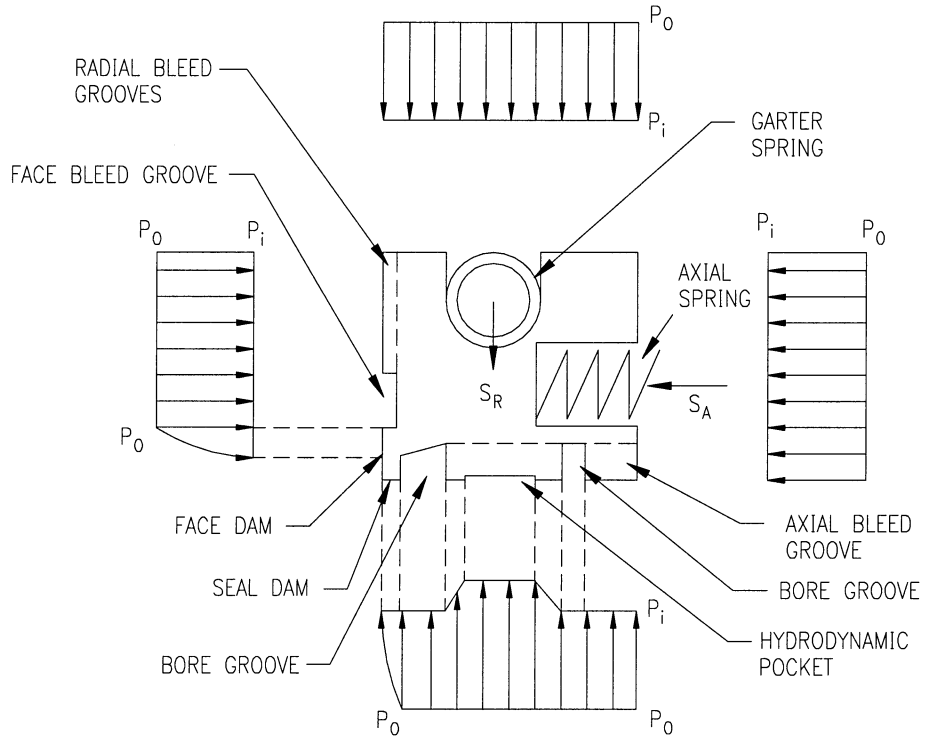


$P_o$ = PRESSURE, UPSTREAM
$P_i$ = PRESSURE, DOWNSTREAM
$S_A$ = SPRING LOAD, AXIAL
$S_R$ = SPRING LOAD, RADIAL

FORCE DIAGRAM
HYDROVENT™ CIRCUMFERENTIAL SEAL

# Hydrovent™ Seal Photograph

# Hydrodynamic Oil Seal
## Dynamic Test Rig

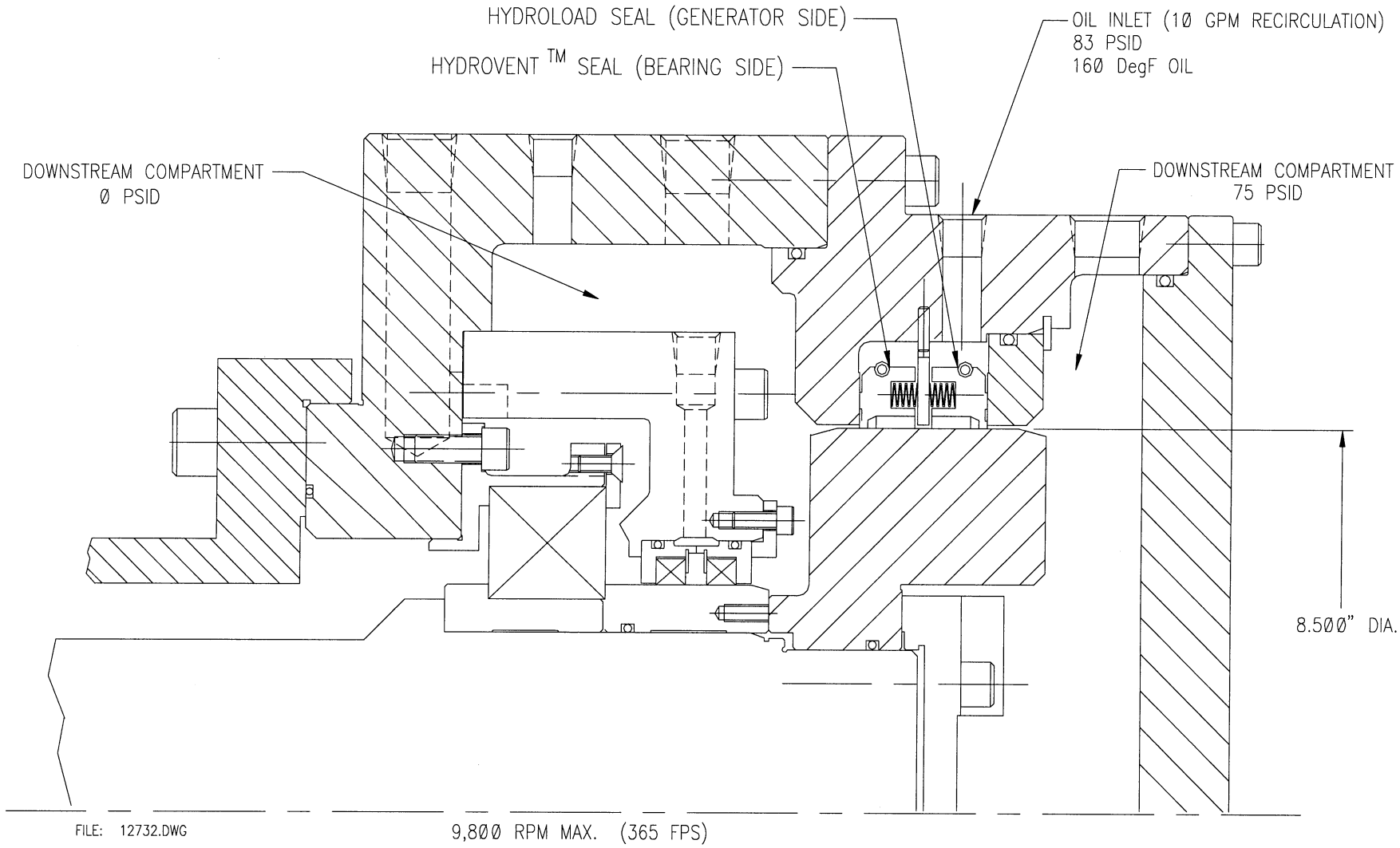

# Dynamic Rig Test
# Performance Mapping

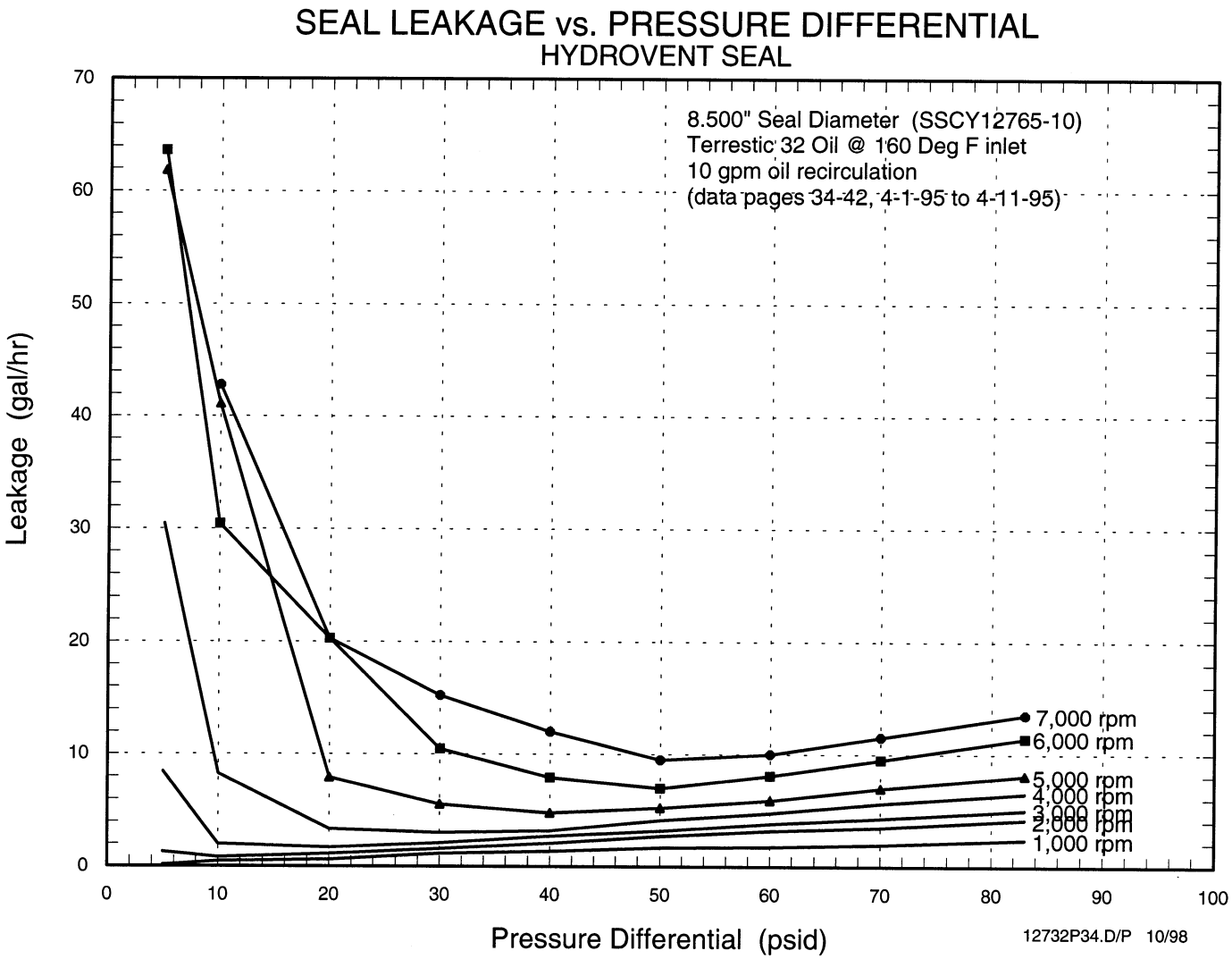

# Dynamic Rig Test - Endurance Test

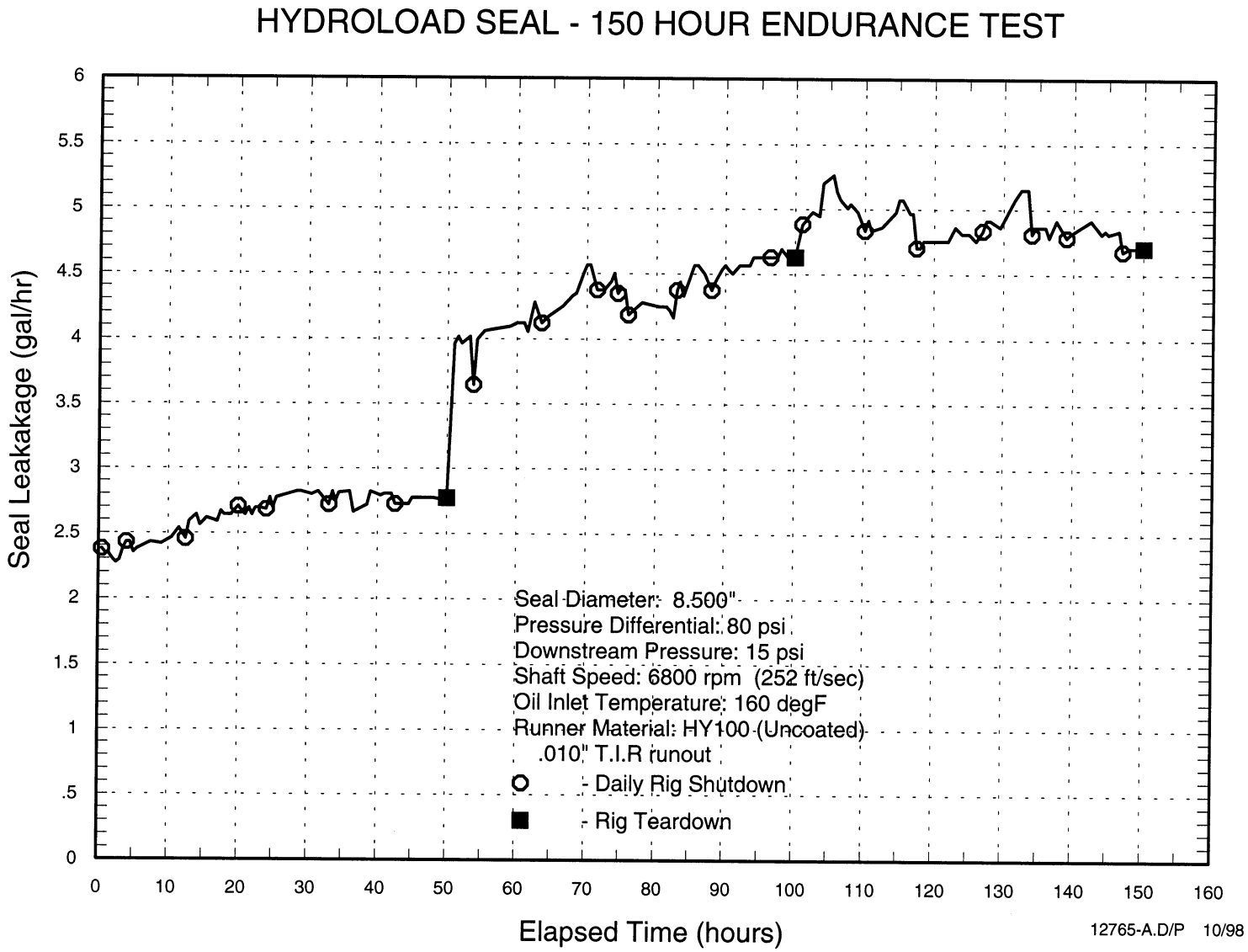

# Hydrodynamic Oil Seal
## Current Conclusions

- Hydrovent™ Seal operated successfully to:
  - 365 ft/sec (goal: attained)
  - 83 psid (goal: attained)
  - 160 °F (goal: 120 °F)
  - Seal leakage: < 30 gal/hr.
  - Seal operated successfully during 150 hr. endurance test with 10 mil rotor swash
- Seal performance is predictable
  - Stein computer codes & validation tests agree
  - Further code development is ongoing
- Additional tests are required & ongoing

# Hydrostatic Face Seal Development

- Aspirating Face Seal
  - Compressor Discharge
- Stepped Face Seal
  - Turbine Rim Sealing
  - Compressor Discharge

# Aspirating Seal Improvement

## Funding:

- Provided by GEAE
  - Cincinnati, OH
- Developed under NASA's AST program
  - Lewis Research Center

## Program Goals:

- Increase gas film stiffness compared to existing seal
  - (1994 design)
- Maintain gas film clearance
  - .0015" to .0025"
- Maintain rotor runout capability at:
  - .005" & .010"
- Build & rig test sub-scale seal
- Build full size seal & rig test at GE CRD

# Aspirating Seal Improvement

Two seal sizes developed

- 36″ seal (GE-90)
  - For rig testing at GE CR & D
  - Design utilizes existing rig rotor with modifications
- 14.7″ seal (sub-scale)
  - Optimized design
  - For rig testing at Stein

# Aspirating Seal

ASPIRATING SEAL FORCE BALANCE

FORCE BALANCE EQUATION: $F_c = F_g + F_d + F_s + \text{Inertia} + \text{Friction}$

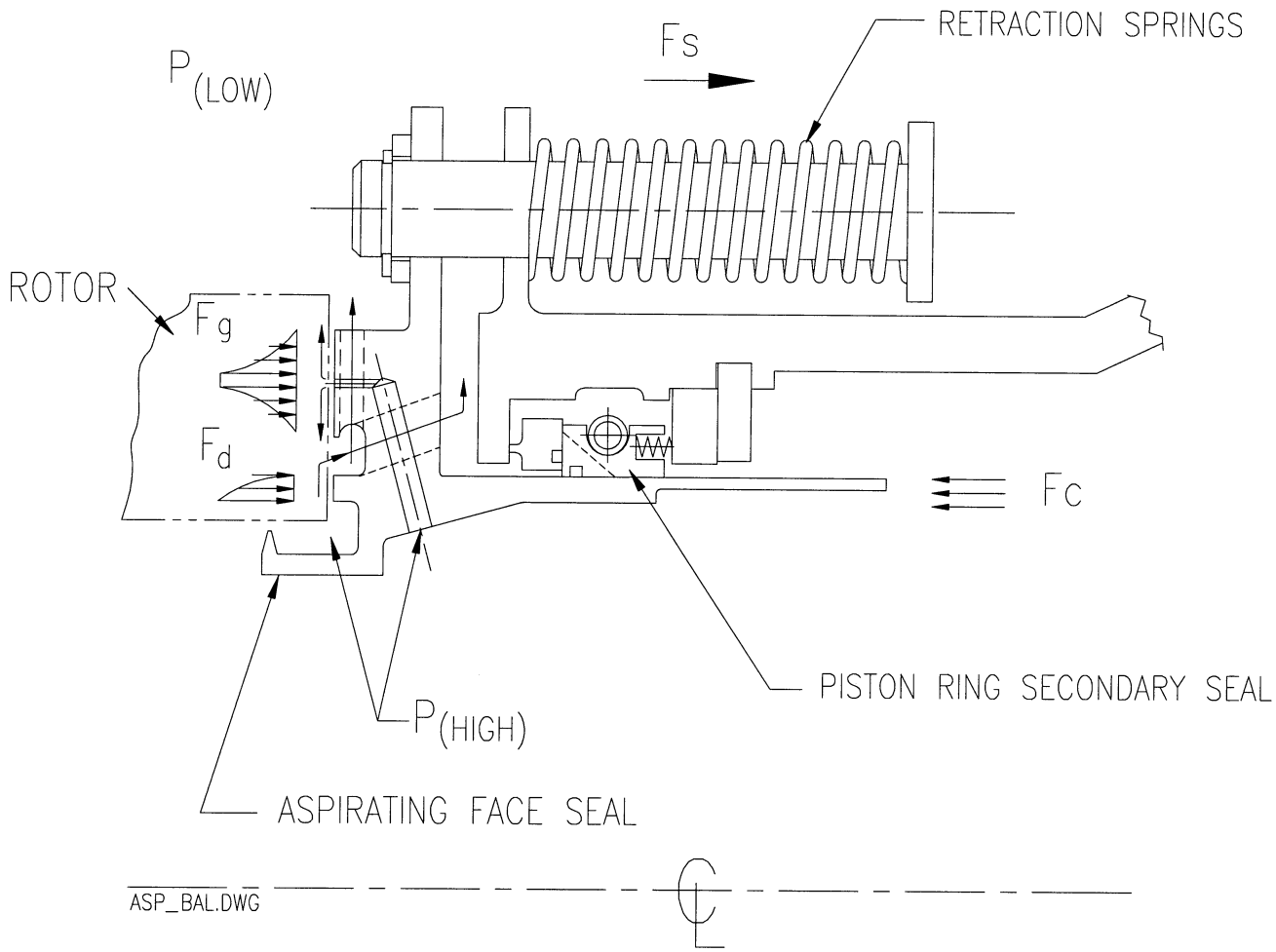

# Aspirating Seal - Work Performed

- Parametric studies
  - Varied seal dam, gas bearing features, & trench geometry's to determine performance effects
- Optimized design
  - 36″ seal, .550″ gas bearing, .050″ dam, .180″trench
    - » Rotor flow deflector required
  - 14.7″ seal, 1.250″ gas bearing, .250″ dam, .450″ trench
    - » Eliminated need for rotor flow deflector
- CFD analysis (CFDRC Corp.)
  - Performed on 14.7″ & 36″ seals
  - Operating gap: .0015″ to .0020″
- Gas bearing rig tests
  - Validation of analytical work
    - » NASA's GFACE Code

# Aspirating Seal Dimensions

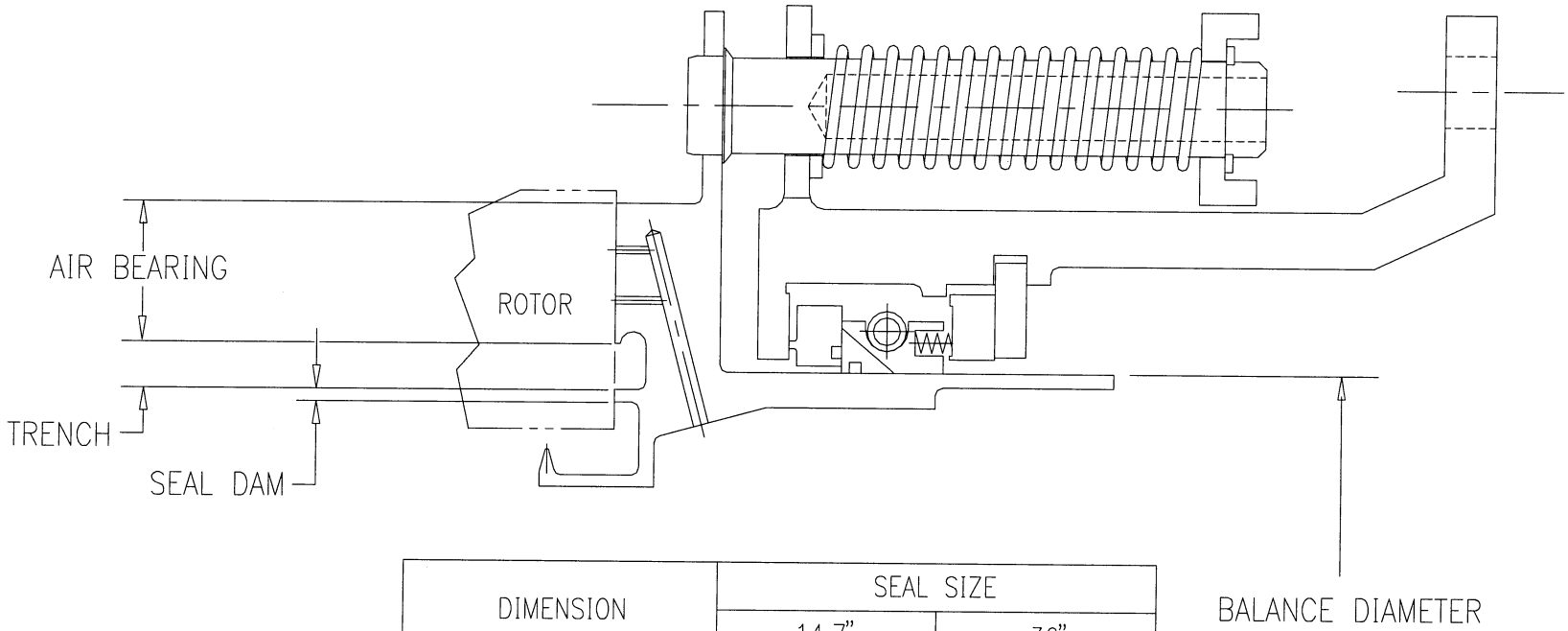


| DIMENSION | SEAL SIZE | |
|---|---|---|
| | 14.7" | 36" |
| AIR BEARING WIDTH | 1.250" | .550" |
| TRENCH | .450 | .180" |
| SEAL DAM | .250" | .050" |
| BALANCE DIAMETER | 14.700" | 36.160" |
| ORIFICE DIA | .030" | .030" |
| ORIFICE SPACING | .828" | .806" |
| NUMBER OF ROWS | 2 | 2 |

ASP_14-36.DWG

# Aspirating Seal Development
## Force vs. Clearance - 14.7″ seal

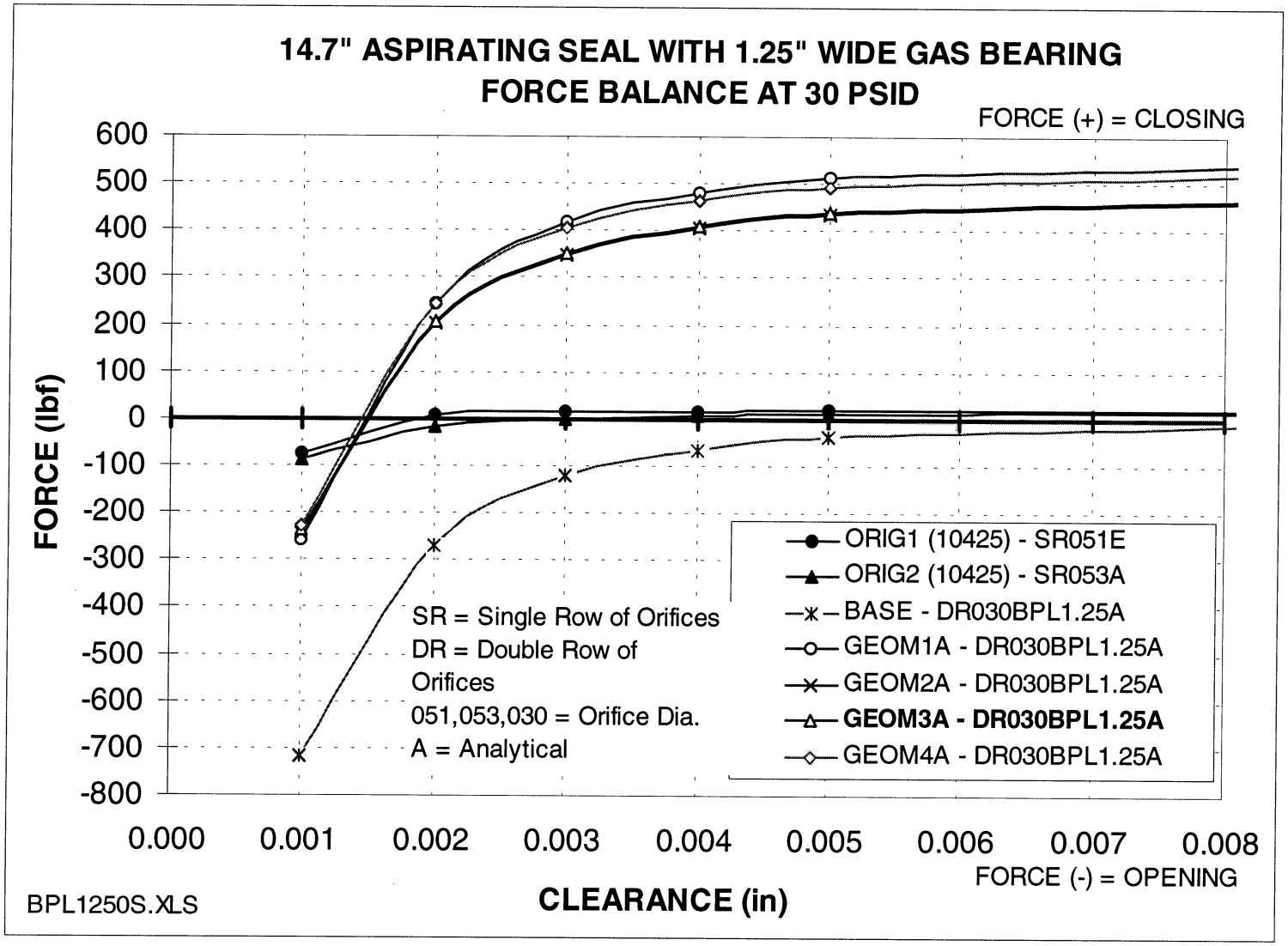

# Aspirating Seal Development
## Force vs. Clearance - 36" seal

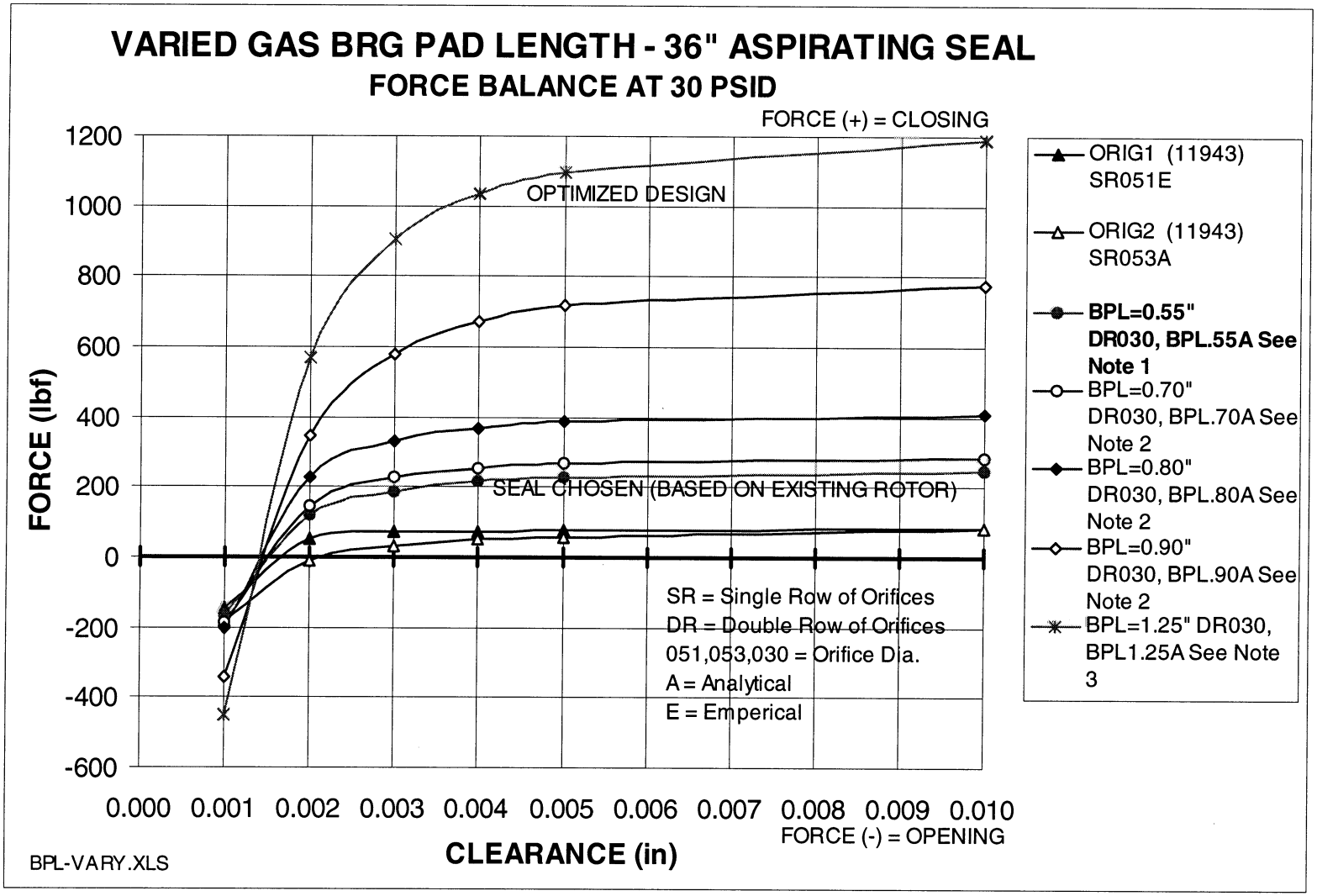

# 14.7″ Aspirating Seal - Dynamic Test Rig

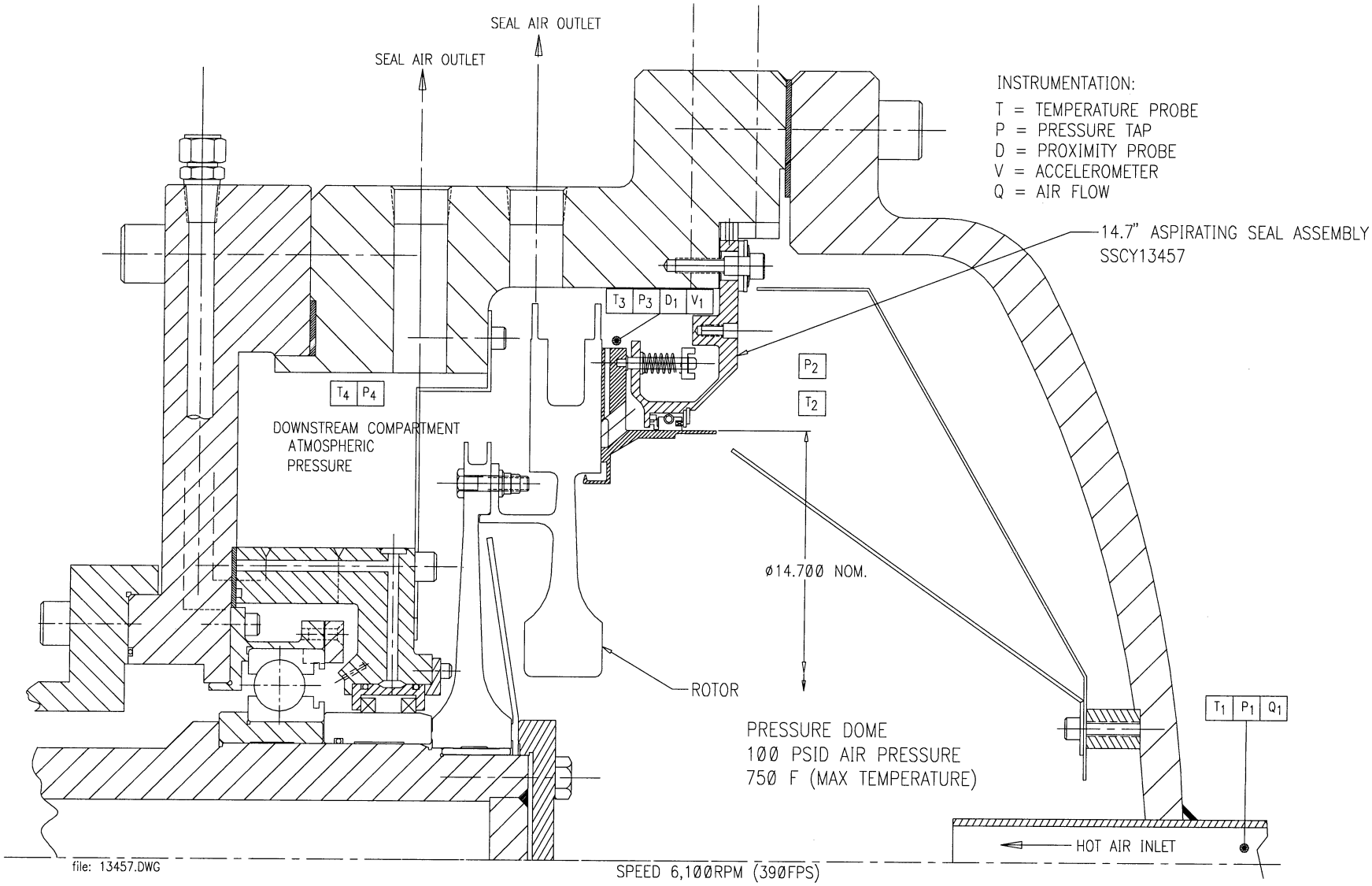

# Stepped Face Seal Development

Program Goal:

- Develop seal for:
  - High temp. & press.
  - Low leakage
  - All metal seal design
- Hydrostatic Seal
  - Stepped face gas bearing
  - Non-Contacting
    - » ~.0015" film clearance
- US Patent pending

Conditions:

- Temperature: ~ 1300 $^{o}$F
- Speed: 1,050 ft/sec
- Pressure: > 250 psid
- Applications:
  - Turbine Rim Seal
  - Compressor Discharge

# Stepped Face Seal Development

## HYDROSTATIC GAS BEARING vs. STEPPED FACE GAS BEARING

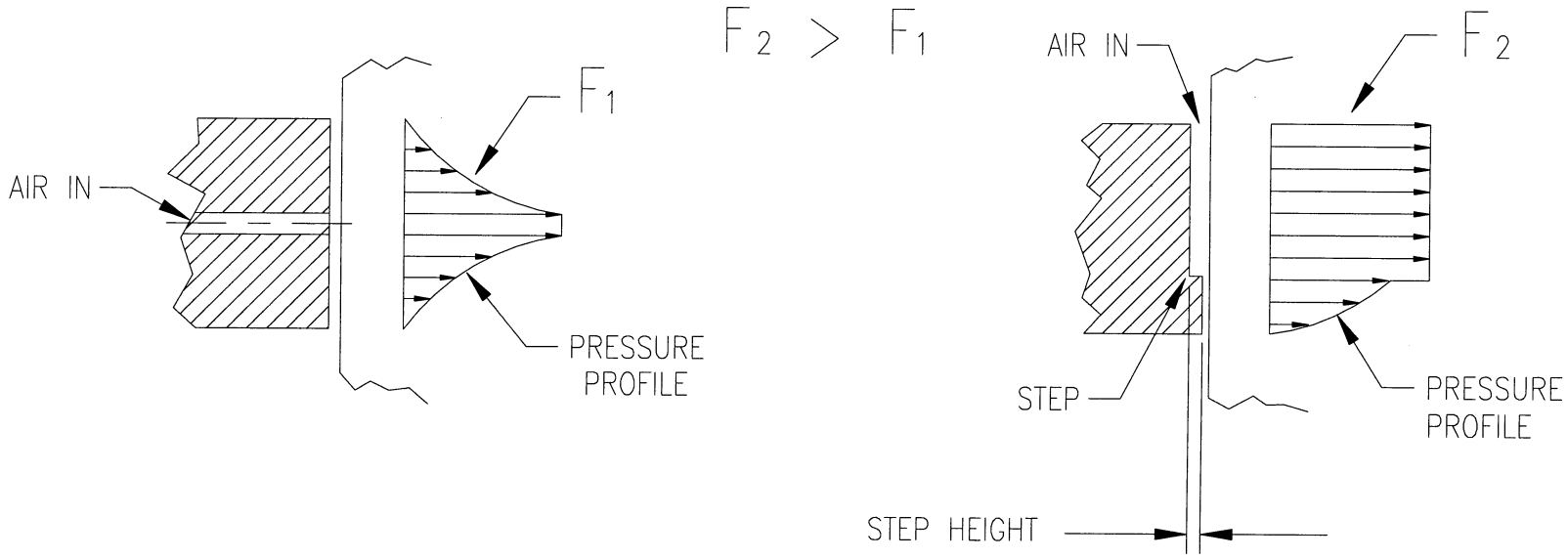


SELF-ACTING HYDROSTATIC AIR BEARING

STEPPED FACE GAS BEARING

12920FIG.DWG

# Stepped Face Seal
## Computer Code Development

- Code 1
  - Evaluates *hydrostatics* of the seal interface
    - » Calculates pressures, forces, & flow
  - Uses compressible laminar & turbulent flow analysis
  - Includes effects of taper on rotor, seal step face, & dam
- Code 2
  - Calculates *dynamic response* of seal system due to rotor swash.
  - Includes hydrostatic forces, inertia forces, friction forces for secondary seal & anti-rotational locks
  - Uses Code 1 as sub-routine
  - Seal FEA results as input into Code 2.

# Sub-scale Static Test Rig
## Stepped Face Seal

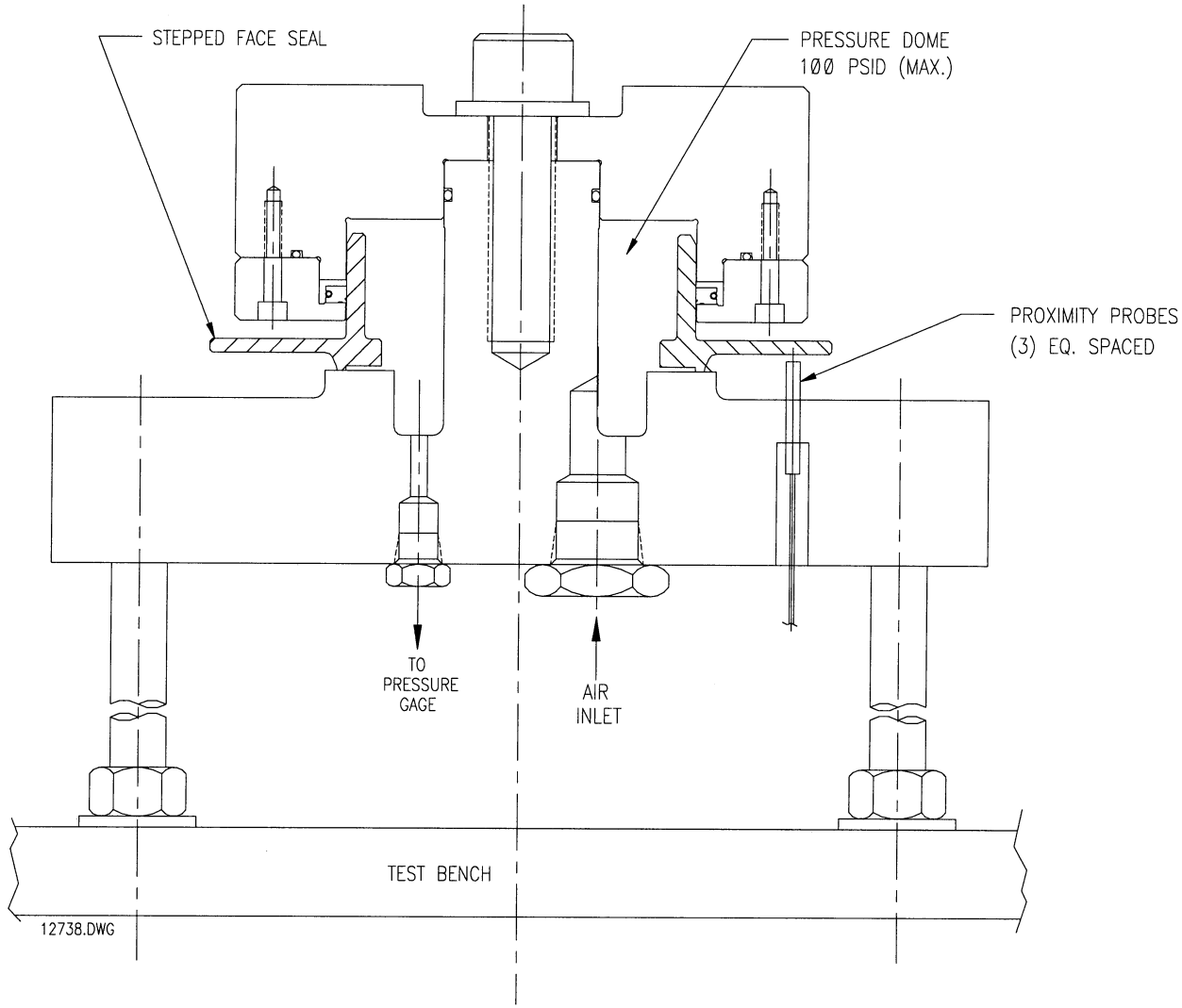

# Stepped Face Seal
## Effects of Step Height

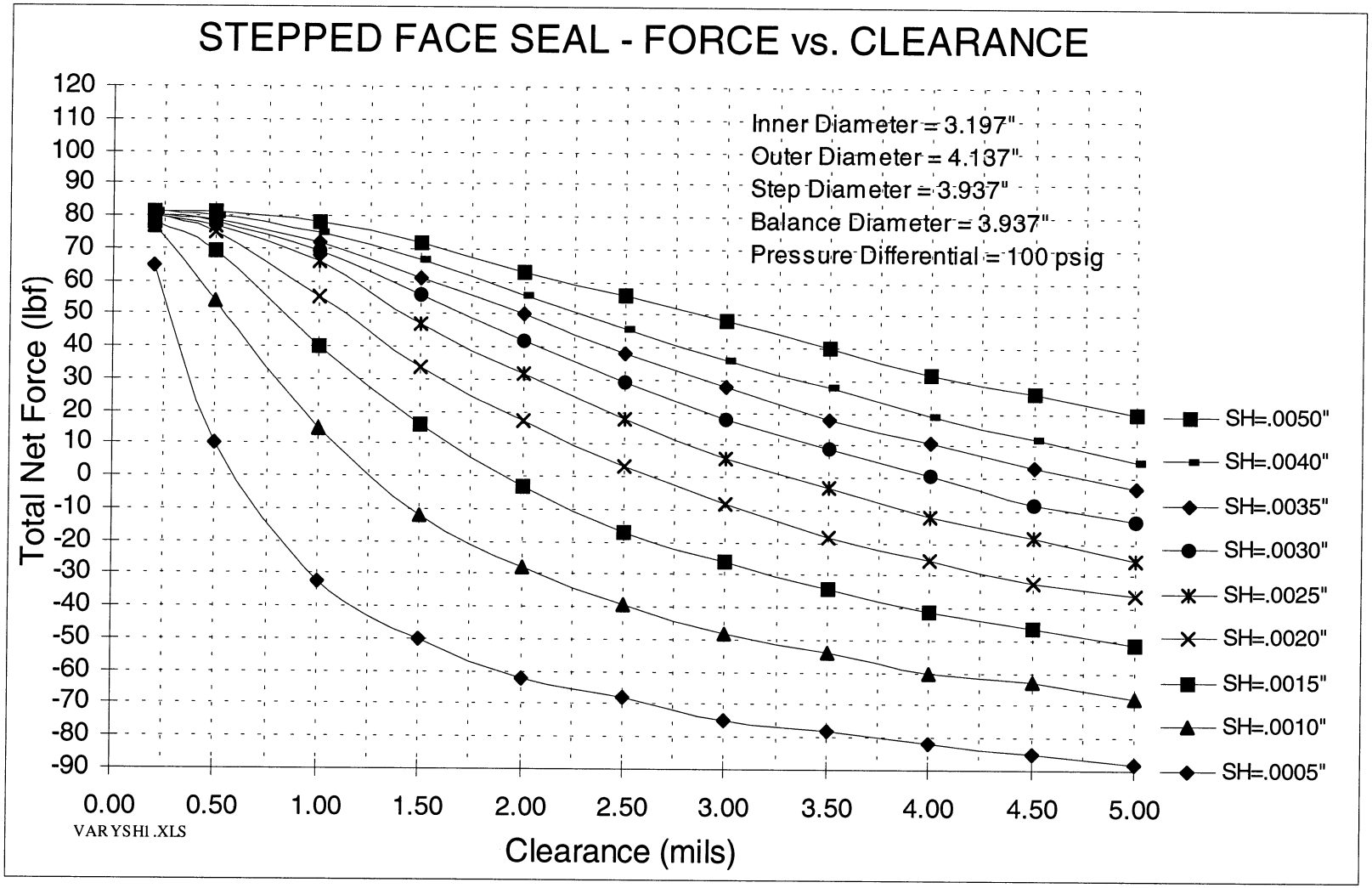

# Dynamic Test Results
## Leakage vs. Speed

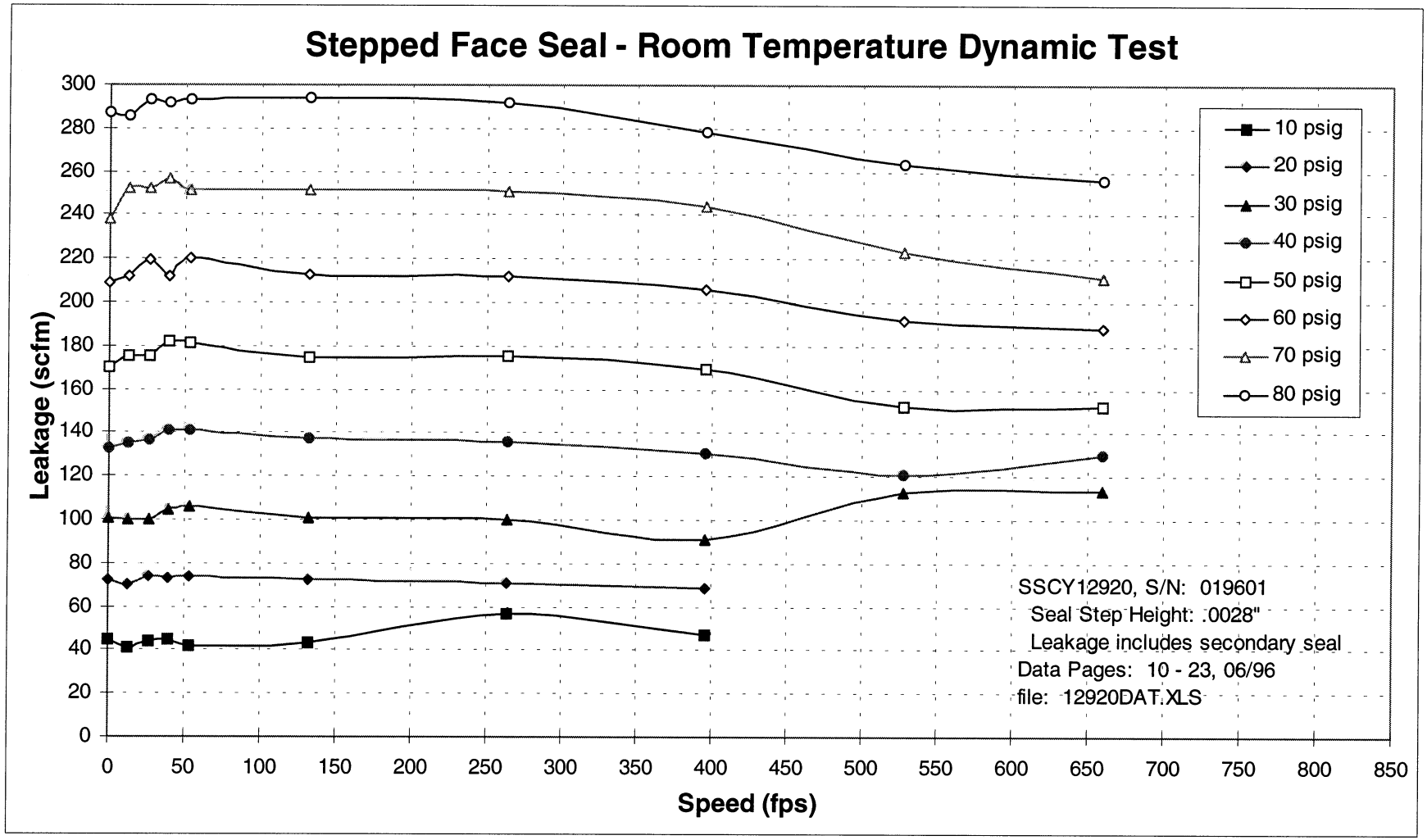

# Dynamic Test Results
## Leakage vs. Pressure

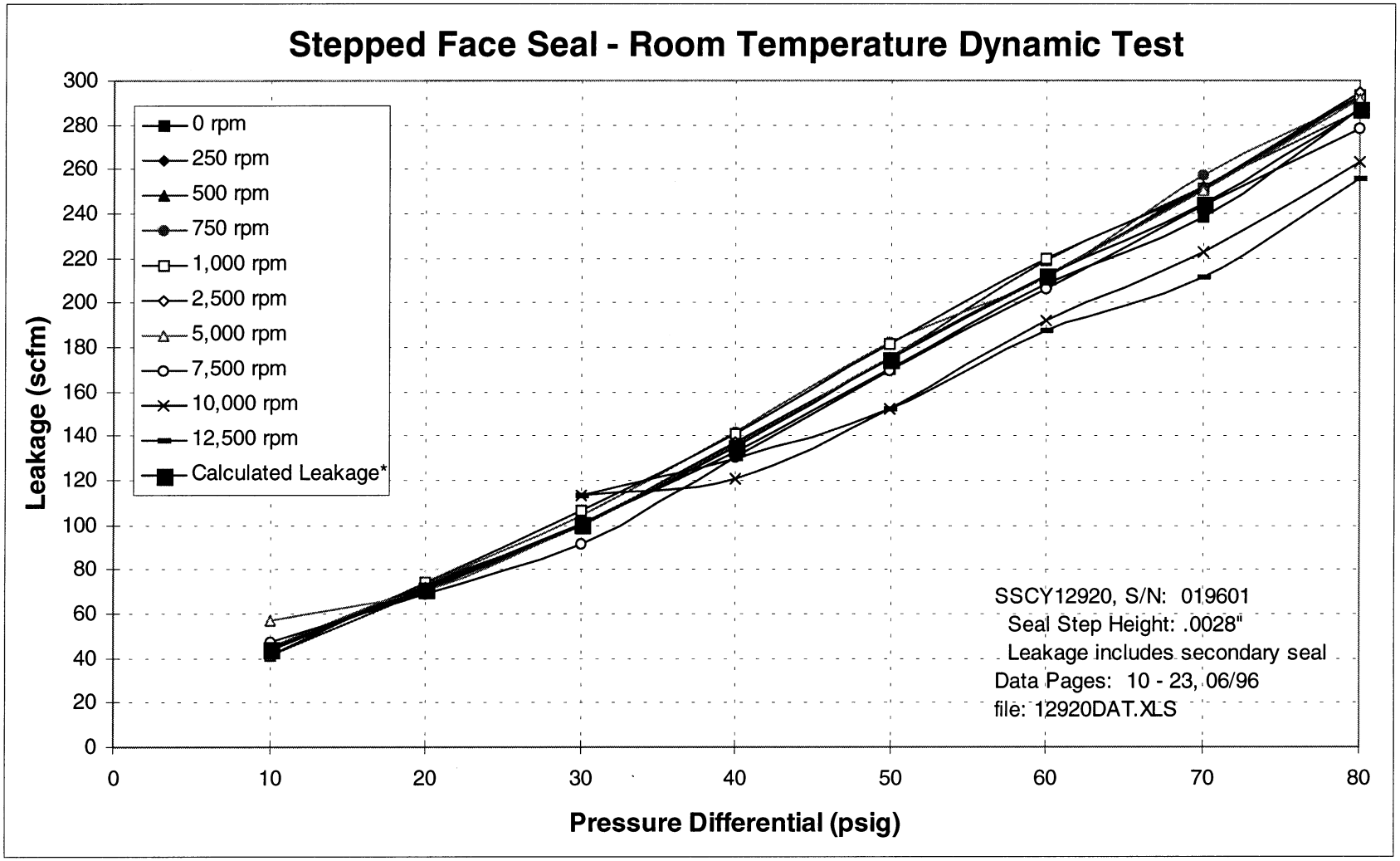

# Stepped Face Seal - Current Conclusions

- Seal operated successfully to:
  - 885 ft/sec (goal: 1050 ft/sec)
  - 100 psid* (goal: 250 psid)
  - 1000 °F (goal: 1300 °F)
  - 3.0 mil rotor swash

*limited by compressor capability

- Seal performance is predictable
  - Stein computer codes & validation tests agree
  - CFD analysis correlates computer codes & test data
  - NASA GFACE code correlates seal interface performance & provided additional information
- Additional tests are required & ongoing

# Hydrostatic Intershaft Face Seal

- Being developed under the Government's SBIR program for:

  Naval Air Warfare Center

  Patuxent River, Maryland

- Contract #N00421-97-C-1228
  - Phase II awarded in July 1997
- Technical Rep. (Navy): Pauline Tarrantini

# Hydrostatic Intershaft Face Seal
## Program Goals

- Produce Seal for IHPTET/JSF Engine
- Meet leakage and performance goals
- Increase Seal Wear Life
- Increase Seal Operating Speed

# Hydrostatic Intershaft Face Seal
## Operating Conditions

- Upstream Pressure 95 psia
- Downstream Pressure 55 psia
- Temperature 850 $^{o}$F
- HP Turbine Speed (inner) 18,600 rpm
- LP Turbine Speed (outer) 11,200 rpm
  (Equivalent PLV) 715 fps
- Target Leakage 0.5 SCFM per psid
  (0.11 lbm/sec)
- Seal Diameter ~5.5 "

# Hydrostatic Intershaft Face Seal Location

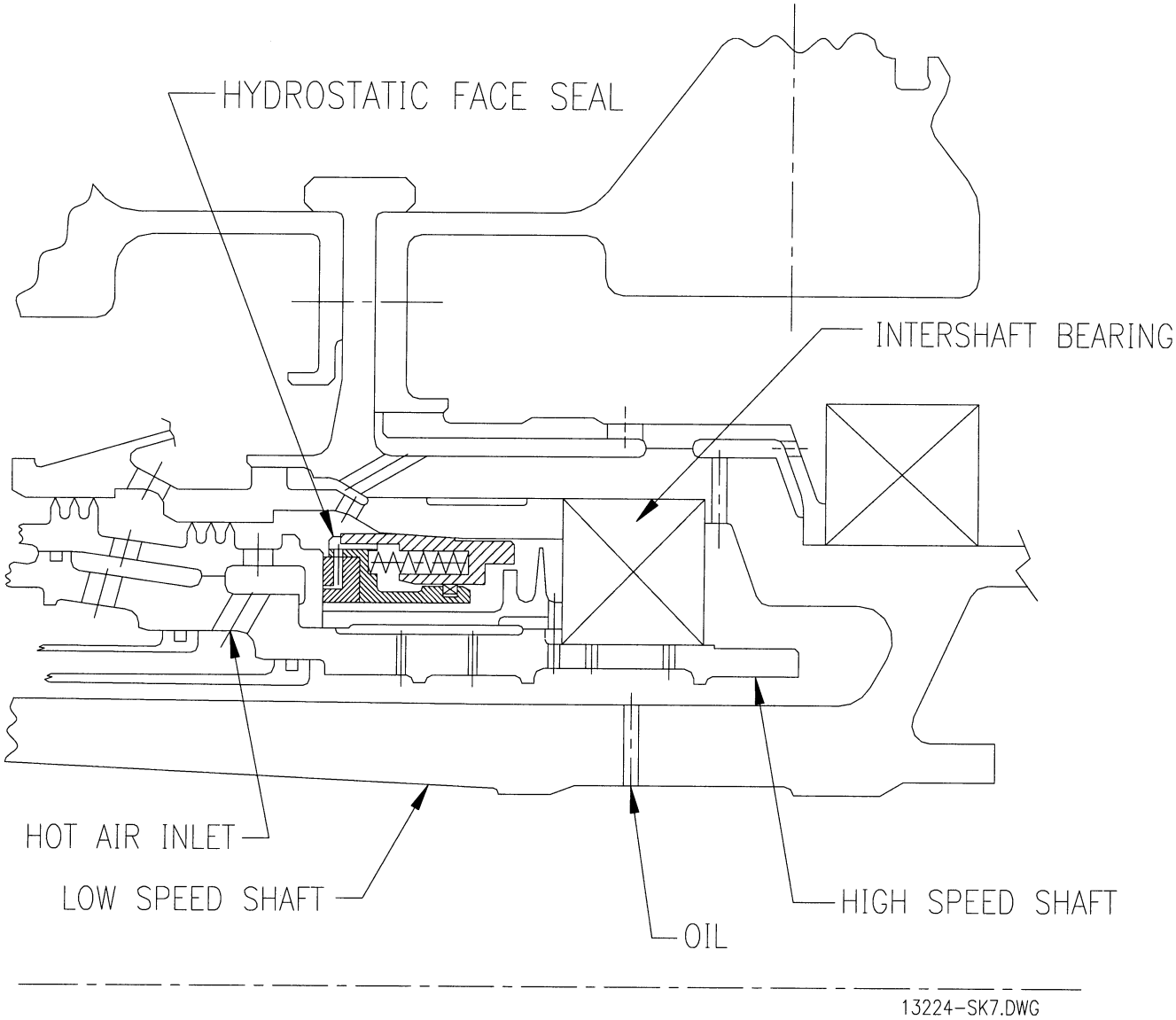

# Hydrostatic Intershaft Face Seal

## Development Challenge

- Dynamic misalignment imposed by the two shafts
- Dynamic excursions of two shafts
- Centrifugal loading on seal
- High interface speeds for seals

# Hydrostatic Intershaft Face Seal
## Seal Performance Study

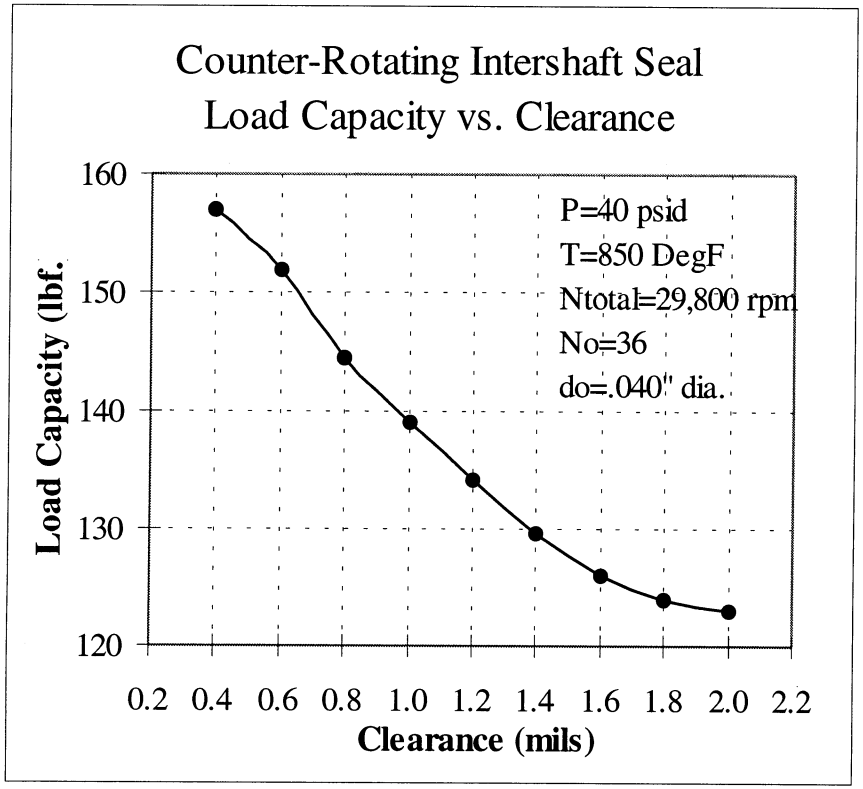


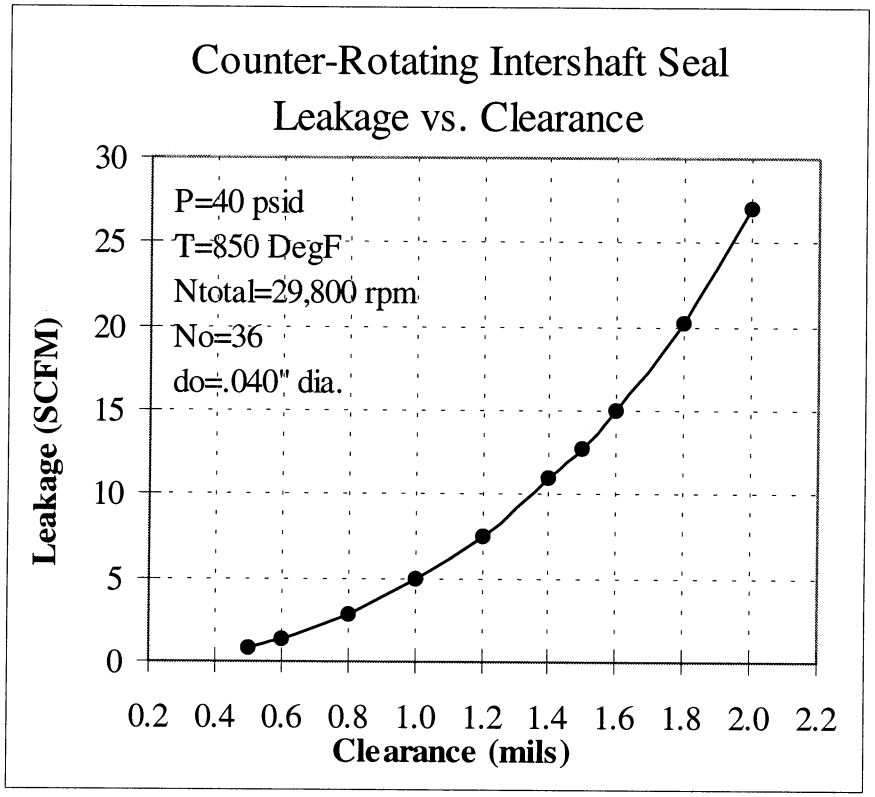

# Hydrostatic Intershaft Face Seal
## Seal Performance Study

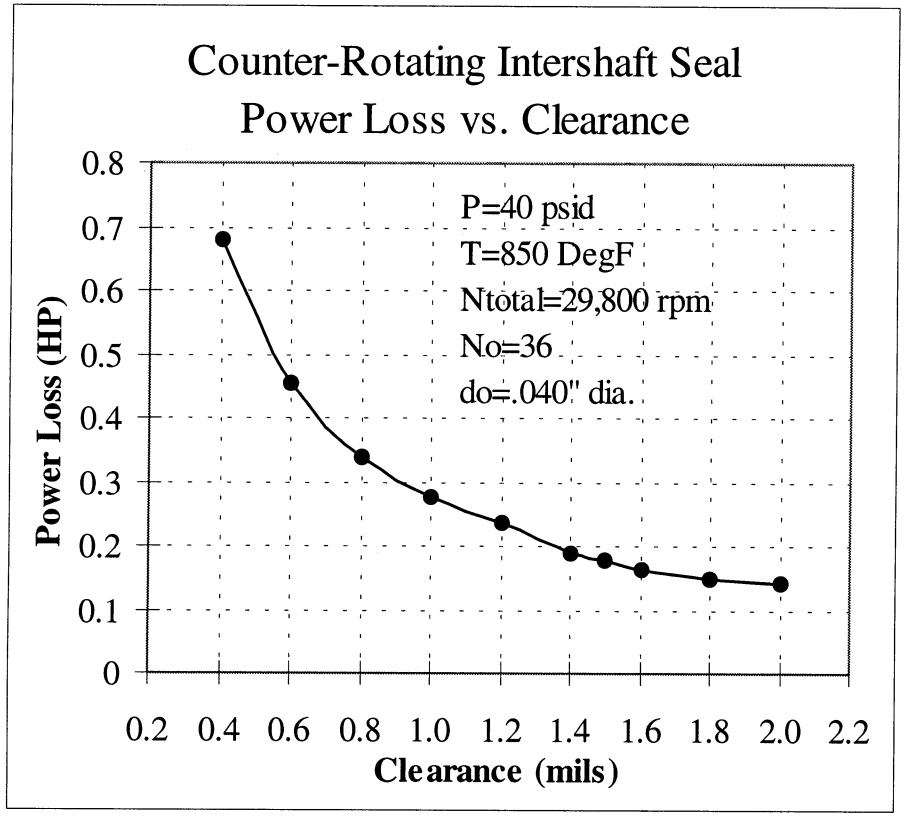


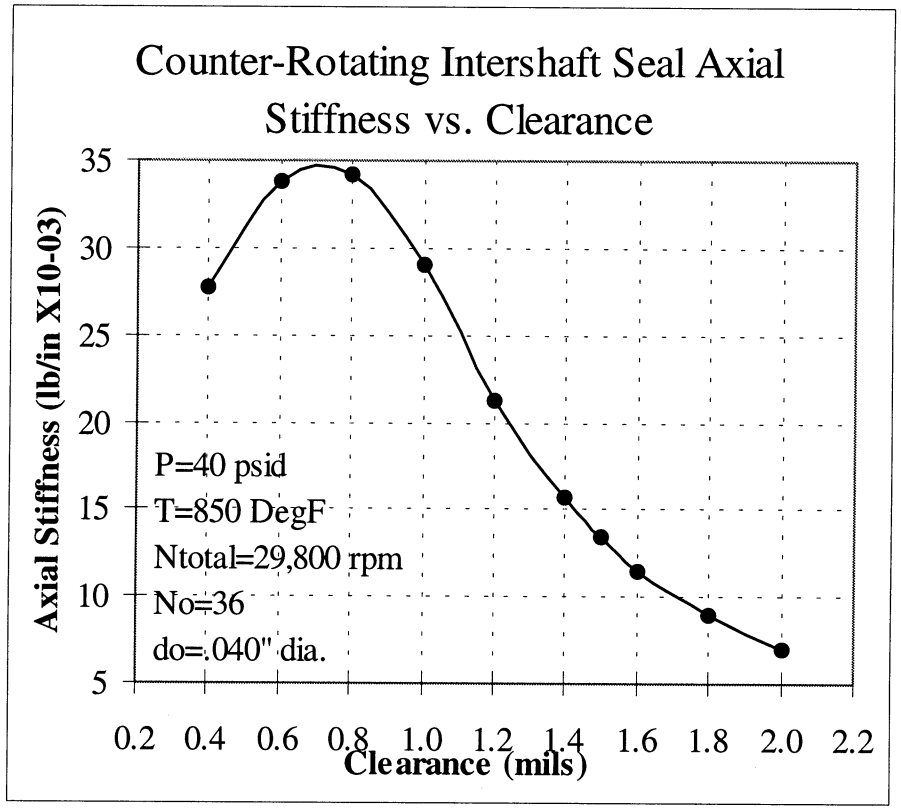

# Hydrostatic Intershaft Face Seal
## Static Gas Bearing Test Rig

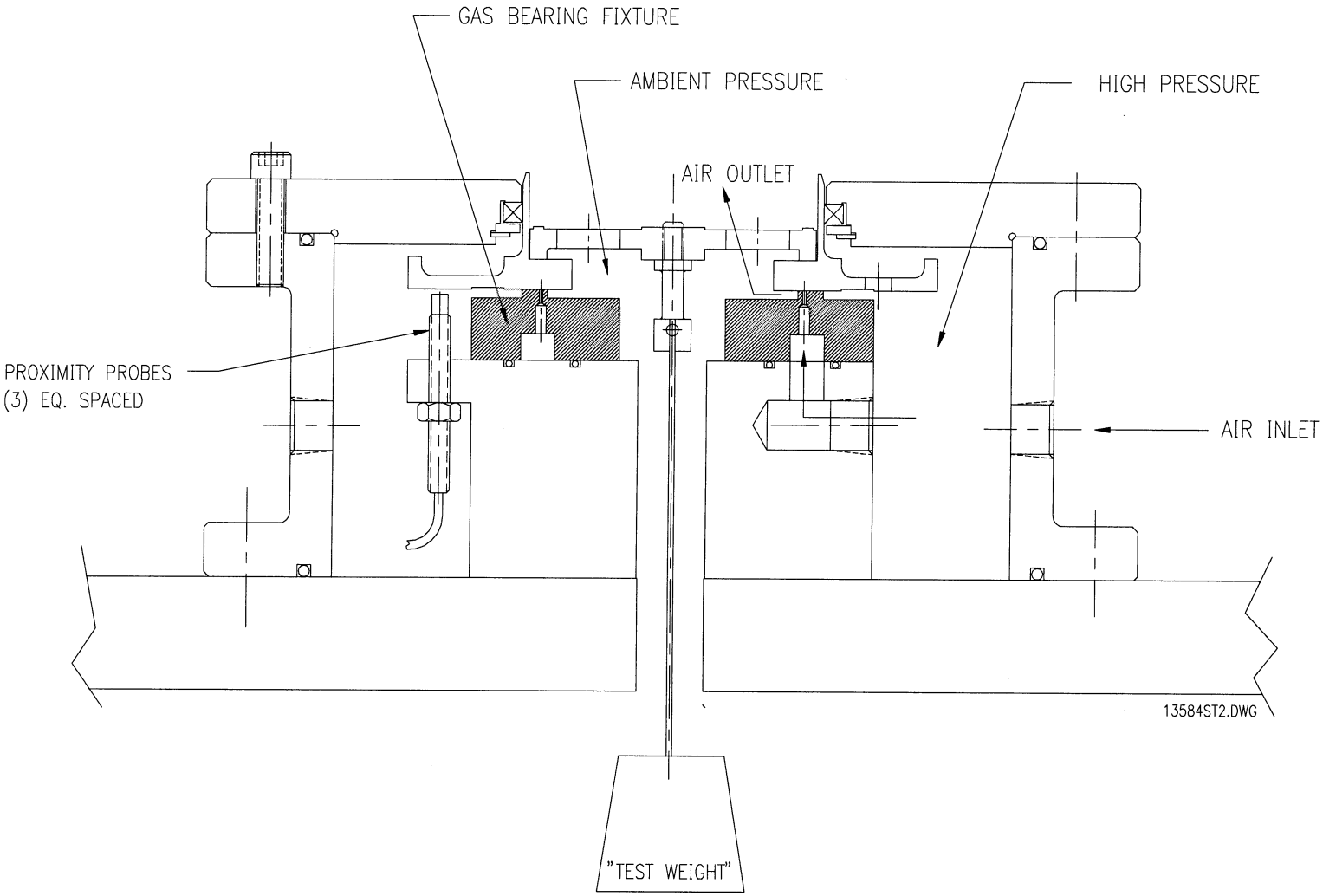

# Hydrostatic Intershaft Face Seal
## Static Gas Bearing Test Results

Purpose of test

- Validate seal code (GFACE)
- Determine orifice $C_d$
- Determine performance
  - Leakage vs. Clearance
  - Clearance vs. pressure
  - Recommend seal geometry

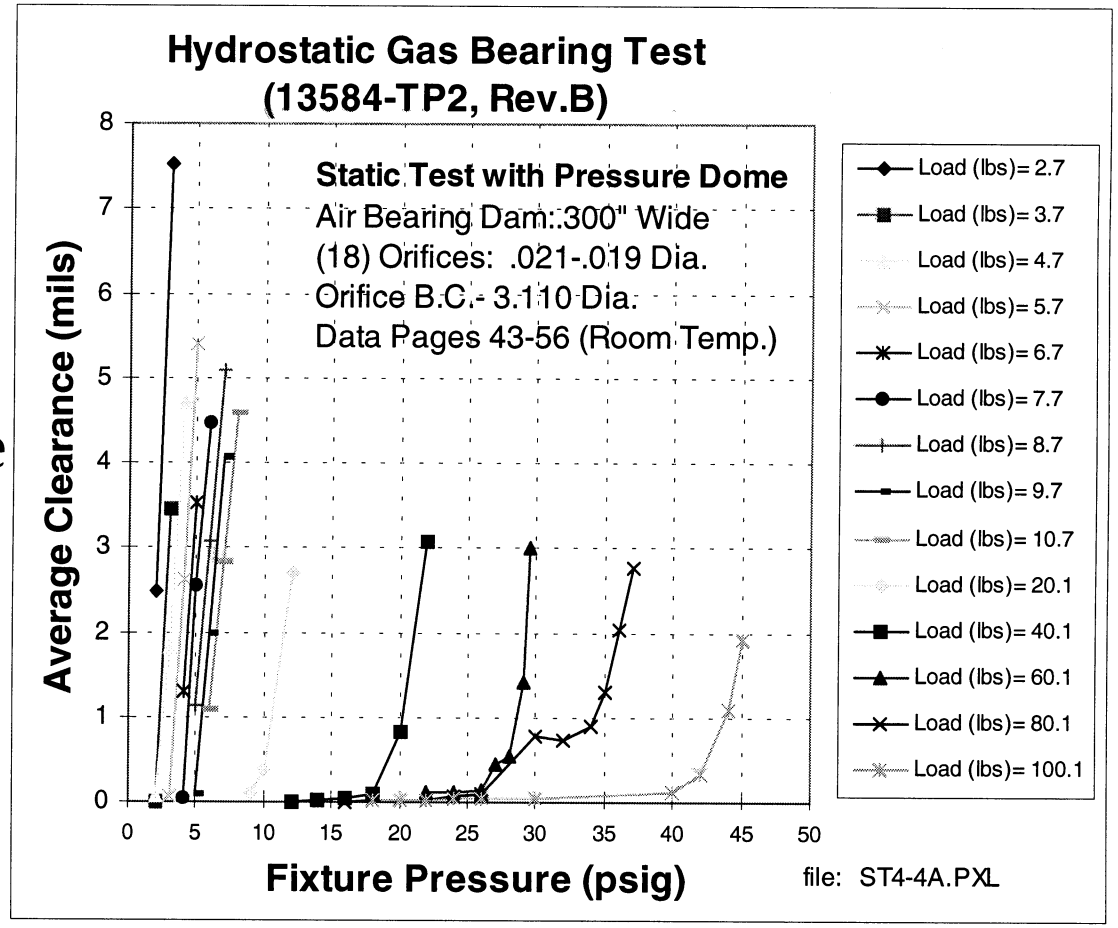

# Hydrostatic Intershaft Face Seal
## Dynamic Test Rig

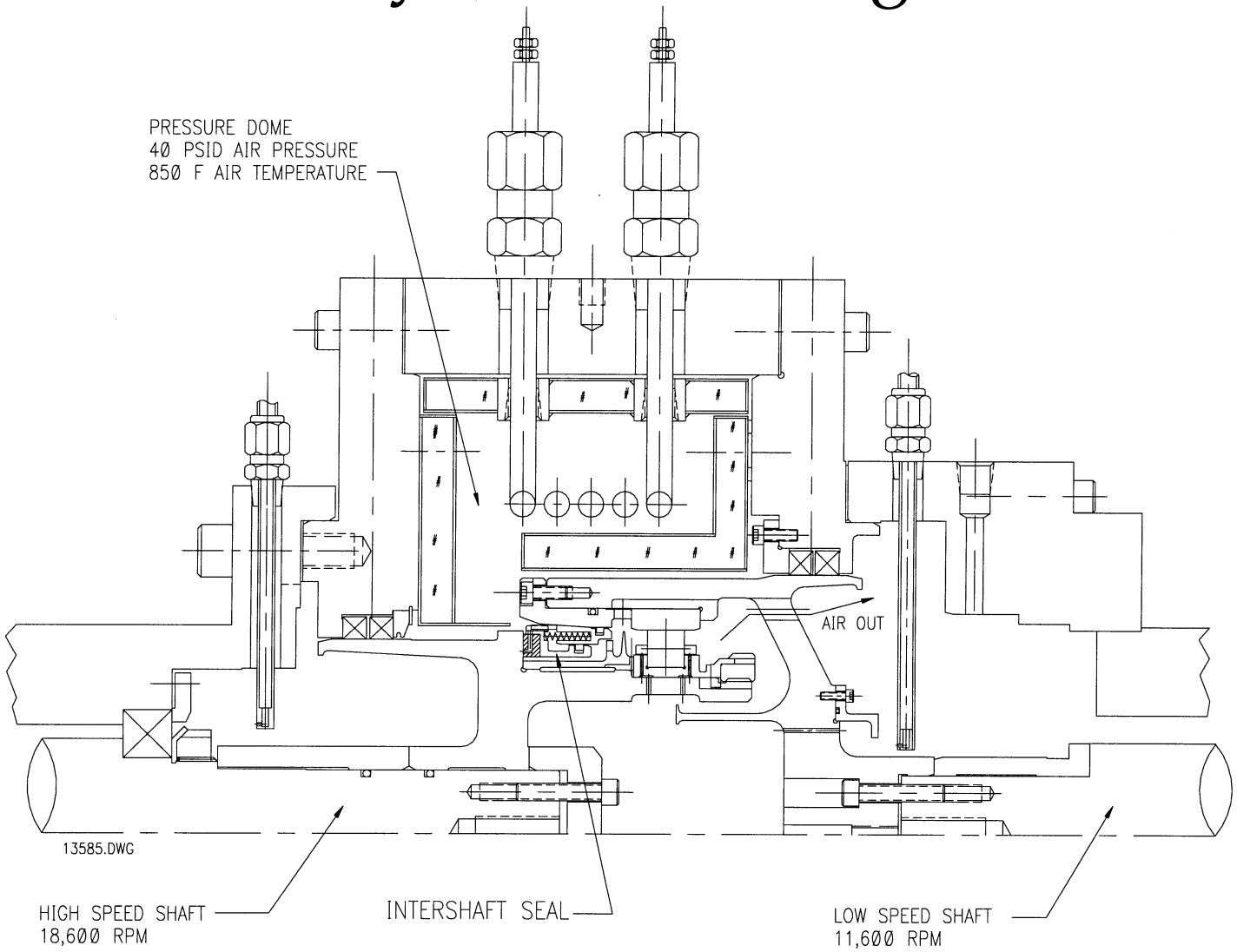
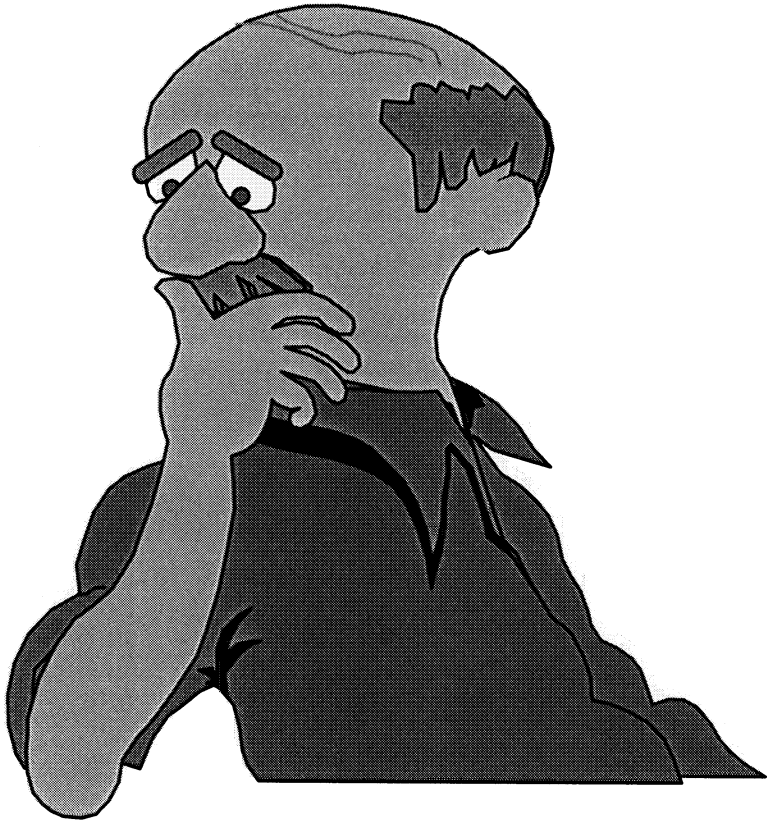
# Any Questions or Comments?