PERFORMANCE OF BRUSH SEALS IN LARGE COMMERCIAL ENGINES

Frederic Mahler and Esther Boyes
Pratt & Whitney
East Hartford, Connecticut

(see slide 1)
This an update of a paper given last year at the AIAA/Joint Propulsion Conference in San Diego. Esther Boyes cannot be here today. For those of you who know her, she recently had another baby. A boy.

(see slide 2)
To introduce brush seals into the PW4000, we had to demonstrate significant fuel savings so that the Program Manager will know that it was worthwhile to support our development and also pay for parts to put into an engine, and deal with the aggravation of introducing a new concept. We wanted reliability and durability, based on running a 3-1/2 hour mission (4000 flight cycles or 14000 flight hours between overhaul) or a real short haul, such as in the Asian Islands where their flight time is only 1 1/4 hours. So, you get all kinds of different operating conditions, some of which are nice, some of which aren't so nice, but you deal with them.

We aimed at simple manufacturing processes. For this new concept we wanted to assure ourselves that we could achieve low costs. We didn't want to make a big investment in a lot of manufacturing equipment and we had to face the challenge to develop it, certify it, and ramp up very rapidly in manufacturing for production.

We tried to make the seals simple and easily maintain in the field. We were competing with honeycomb seals, which are at first glance seem an easy system to maintain when in fact it is fairly complicated. You have to machine out the honeycomb and braze it back in, you have to strip the knife edges if they have an abrasive coating on them. Most modern seals do. You have to restore the knife-edge dimensions and re-coat; a lot of logistics that can be very expensive, particularly if you are captive to an outside manufacturing source - Australian or somewhere. If they are the only one's who can do it, they can charge you a lot. So it is really important to pay attention to these things.

(see slide 3)
We first certified brush seals in the PW4168, and also for the Phase III package, which is a performance improvement package that is retrofitted into PW4056 and PW4060 engines. United has seen some of these. There are three different locations, the HPC exit seal, the HPC inner seal, and the TOBI inner seal in this cross-section; which is a lot like the one Sheri put up; fundamentally the lower thrust models of the 68K/PW4000 family. Although these operating conditions are fairly conventional now, except for a delta p's of 190 PSI, at the time, surface speeds were consistent with the state of the art, but we weren't too worried about that. Our objective here was to make sure it worked the first time, and not hold up the program.

(see slide 4)
We then stepped up to the PW4084, and now, the PW4090 and the PW4098 are a little more aggressive. The surface speed here is up to 1150 feet per second. The Delta Ps come down on some parts and up on others; and that's because the thrust balance adjustment for that engine changed. The HPC seals are common, the turbine seals are different. So we're faced with a little bit of an extra challenge. Particularly in controlling clearances out here in the turbine disk periphery, where you wonder about structural stability.

(see slide 5)
We tried to stay with a fairly simple and common, in most cases, configuration which looks a lot like the brush seals everyone else uses. And that was our objective. We had a rivet retainer for simple replacement, we just knock out this rivet, put a new brush seal in, put the L-shaped retainer back and you are done. We have a fool-proofing ridge. Somebody told me about full proofing once, I looked at a compressor variable stator that had some flats on one side. And I said, "What's that?" Someone said, "Well, that's fool-proofing. That makes the fool go and get a bigger hammer". We have added a windage cover for brush seal durability. Particularly to protect against high Reynolds numbers in a fairly constrained area, where the static structure is adjacent to rotating structure. Inco 625 is easy to weld, and the Haynes-25 bristles are also easy material to weld. On the rotor, we decided to put on a hard face. It's a plasma sprayed chrome carbide. It's used in a lot of other places in the engine and its easily repaired. Now, it turns out in the development program that you rarely repaired these coatings; and it's my expectation that repair is not going to be an issue. If the seals are designed right, these coatings should last a long, long time. So, repair of the coating could've been a headache, I don't know that it isn't. But what I've heard is people aren't touching the coatings. And we didn't either, so that's good. I suppose it might be more difficult in other applications, but these worked out for us.

(see slide 6)
During the development certification program, we did a lot of learning. We had a lot of time to look at parts and we ran a lot of accelerated wear tests; including extended operation at take off power for ten minutes, which we don't see in service. About 1-1/2 to 2 minutes is normal service. We had high rotor in balance, that is, we put in twice the amount of in balance as allowed in field engines. We did rapid power transients where the rotor and stator run into one another, at will, with periodic shutdowns and restarts.

(see slide 7 & 8)
Now, what we saw in two specific tests were very interesting. We've run 3,000 cycle engine endurance tests, to certify for extended twin operation over water, ETOPS. This is a requirement. When we did this for two engines, the PW4168 and the PW4804, we compared cold flow results of the test seals to a group of four new production seals. Now let's just say that each one of these blocks here is 0.002 mils effective clearance - a cold flow test at sea level - so the spread on this paper is actually very narrow. We are looking at 2 mils spread effective clearance for the 4 new seals. The PW4168

engine seal after 3000 cycles was basically within the group. The PW4084 engine seal was better than the new production group.

Questions

Ques: How do you control an oil leak through them? Contamination?

Ans: No. The issue is, does oil contaminate a brush seal when it is adjacent to an oil cavity, and I don't have a lot of experience with that, but I know that our people have found some reasonable success but I can't really tell.

Ques: When you compare a worn-in labyrinth seal (lab) and worn-in brush seal - what's the brush seal loss in performance?

Ans: In this case I've shown the PW4000 and in the literature seal leakage is approximately 20% of a lab seal. Then over time it would deteriorate to 50%, but its always going to be better than a lab seal.

Ques: So seals with many thousands of cycles may be 50% of lab?

Ans: Yes. Now in the case of the data I showed you, there is no deterioration, so these seals flow 20% of lab seal or better. Start out at 20% and you could eventually deteriorate to 50%. In the PW4000, so far, there is no deterioration in a flow check.

PW4000 BRUSH SEAL DESIGN OBJECTIVES

- Improved fuel economy compared to labyrinth seals
- Reliability and durability for commercial service
- Simple manufacturing process
- Easily maintained in field service

Brush Seals In the Diffuser/Turbine Section of the PW4168

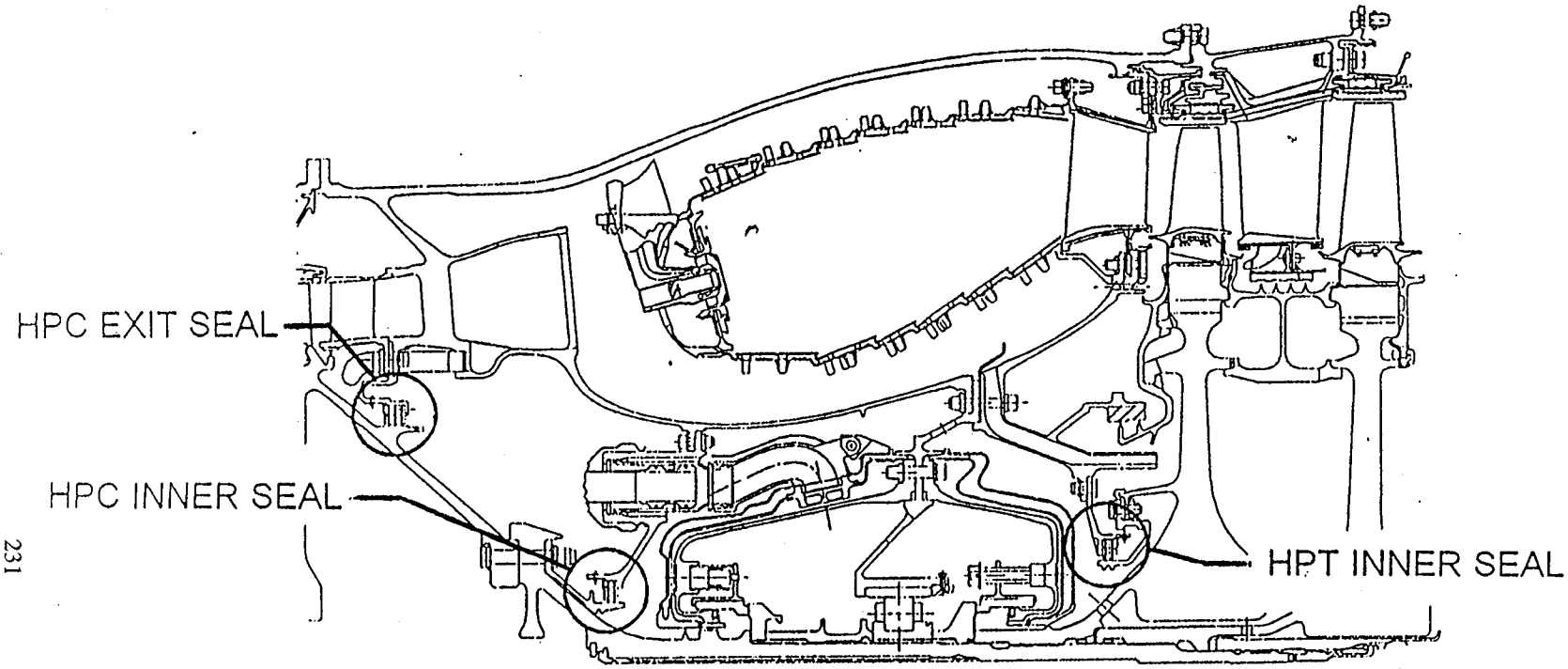

PW4168 Brush Seal Operating Conditions at Takeoff

Location	Diameter (Inches)	Surface Speed (ft/s)	ΔP (PSI)
HPC Exit	19.2	860	190
HPC Inner	9.5	425	86
HPT Inner	11.6	520	153

Brush Seals In the Diffuser/Turbine Section of the PW4084, 4090, 4098

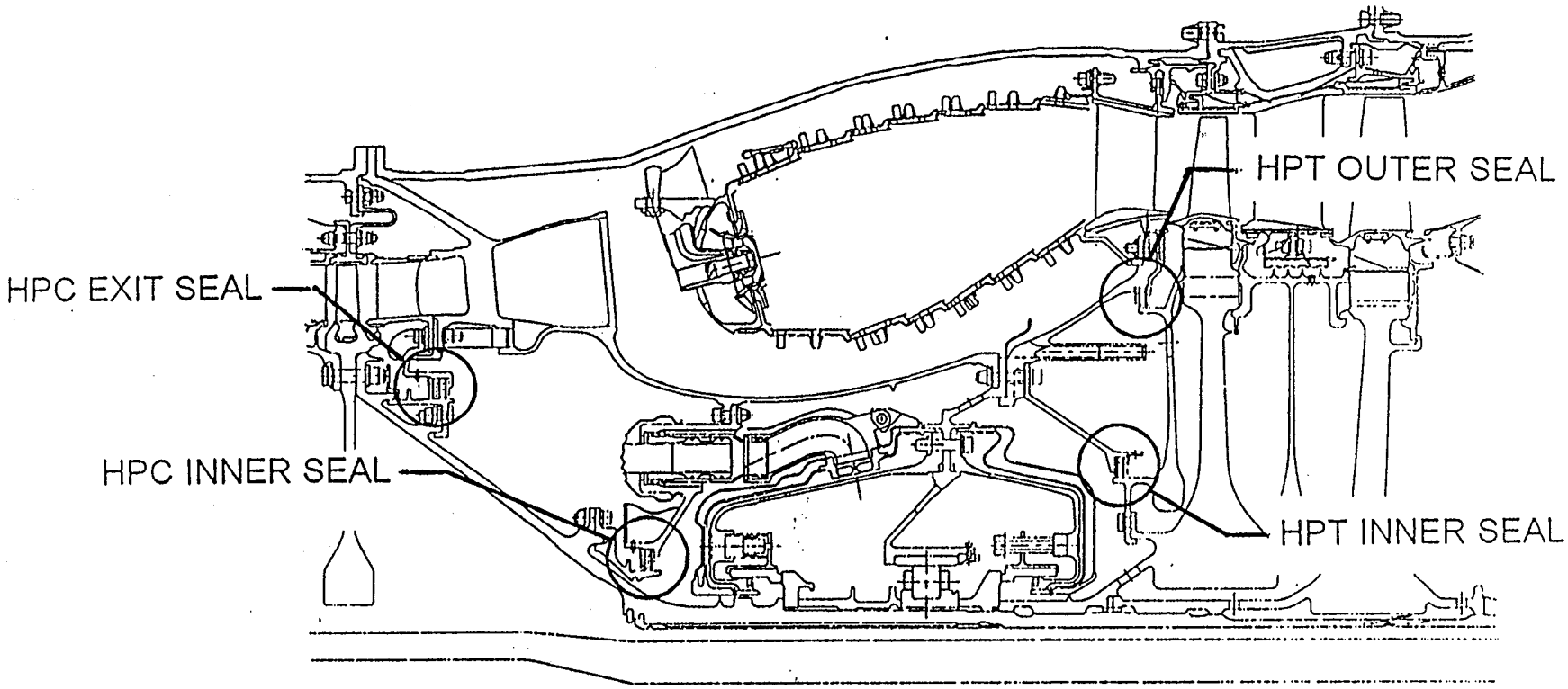

PW4084 Brush Seal Operating Conditions at Takeoff

Location	Diameter (Inches)	Surface Speed (ft/s)	ΔP (PSI)
HPC Exit	19.2	900	140
HPC Inner	9.5	450	185
HPT Inner	14.6	700	160
HPT Outer	24.4	1150	55

BRUSH SEALS DESIGNED FOR LOW COST, LONG LIFE, EASY MAINTENANCE

- Riveted retainer for simple replacement
- Fool-proofing ridge ensures correct installation
- Windage cover for brush durability
- INCO 625 assembly with proven haynes 25 bristles
- Rotating land hardfaced for durability - plasma sprayed chrome carbide

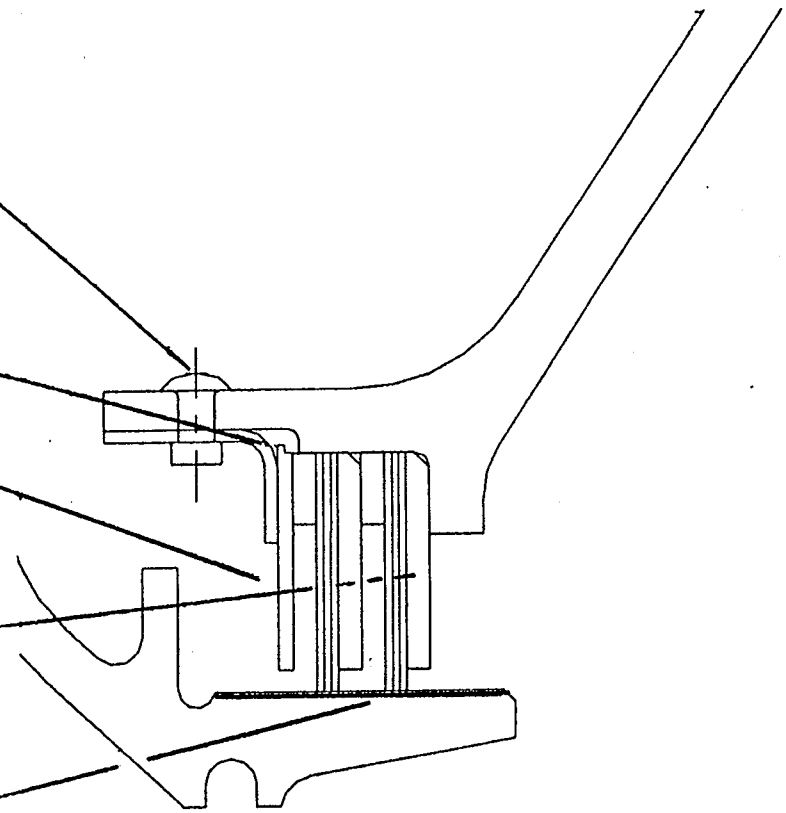

FM95002
7/5/95

ENGINE DEVELOPMENT AND CERTIFICATION

Engine cyclic endurance tests accelerated brush seal wear and tested the structural limits of the design

- Extended operation at takeoff power
- High rotor imbalance
- Rapid power transients, takeoff-to-idle-to-takeoff
- Periodic shutdowns and restarts

SEAL PERFORMANCE RETENTION WAS CONVINCINGLY DEMONSTRATED IN 3000 CYCLE ENGINE ENDURANCE TESTS

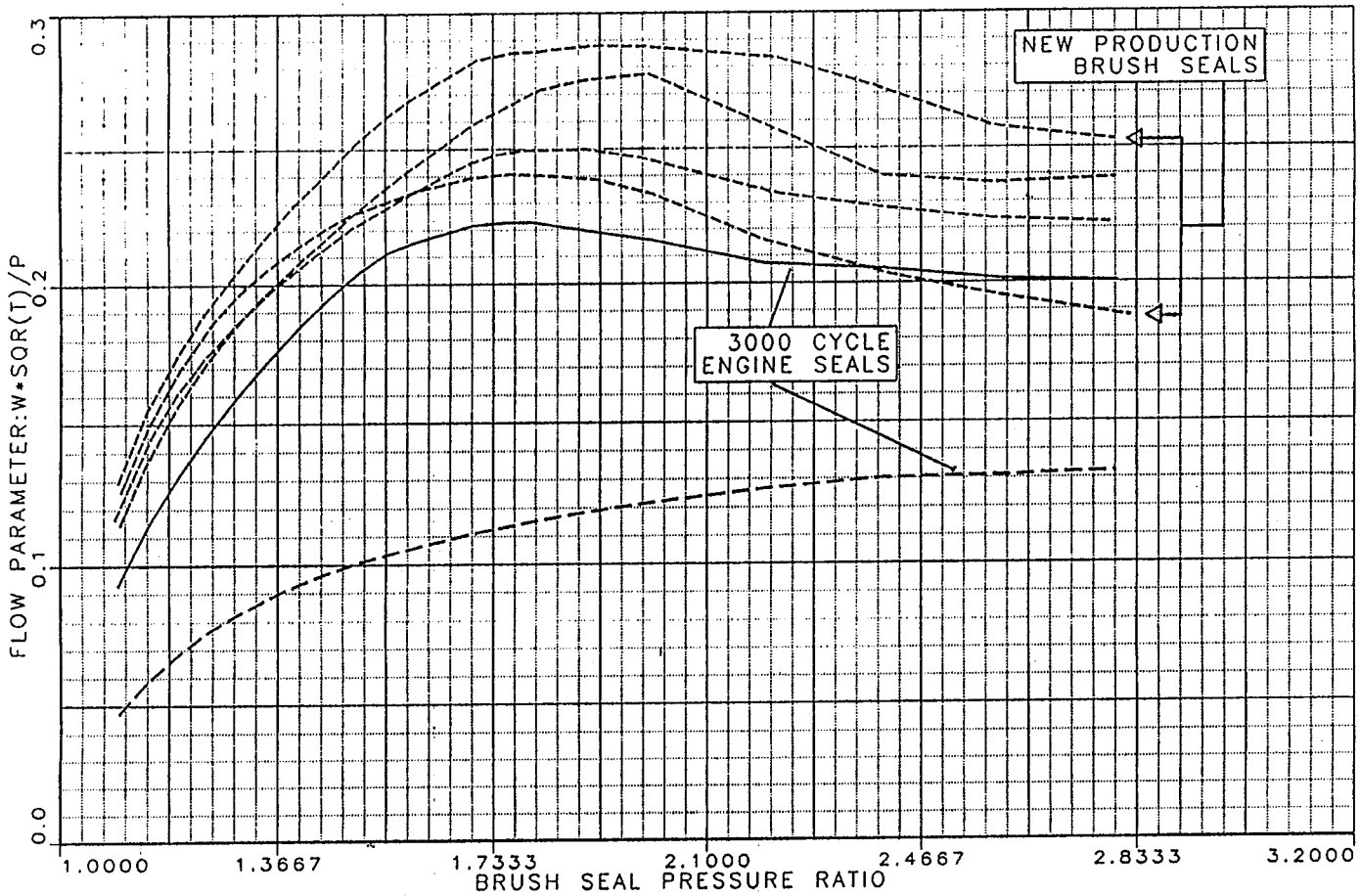

High Pressure Compressor exit brush seal leakage is comparable to new seals

FM19500-7

FLIGHT EXPERIENCE CONFIRMED
ENGINE ENDURANCE TEST RESULTS

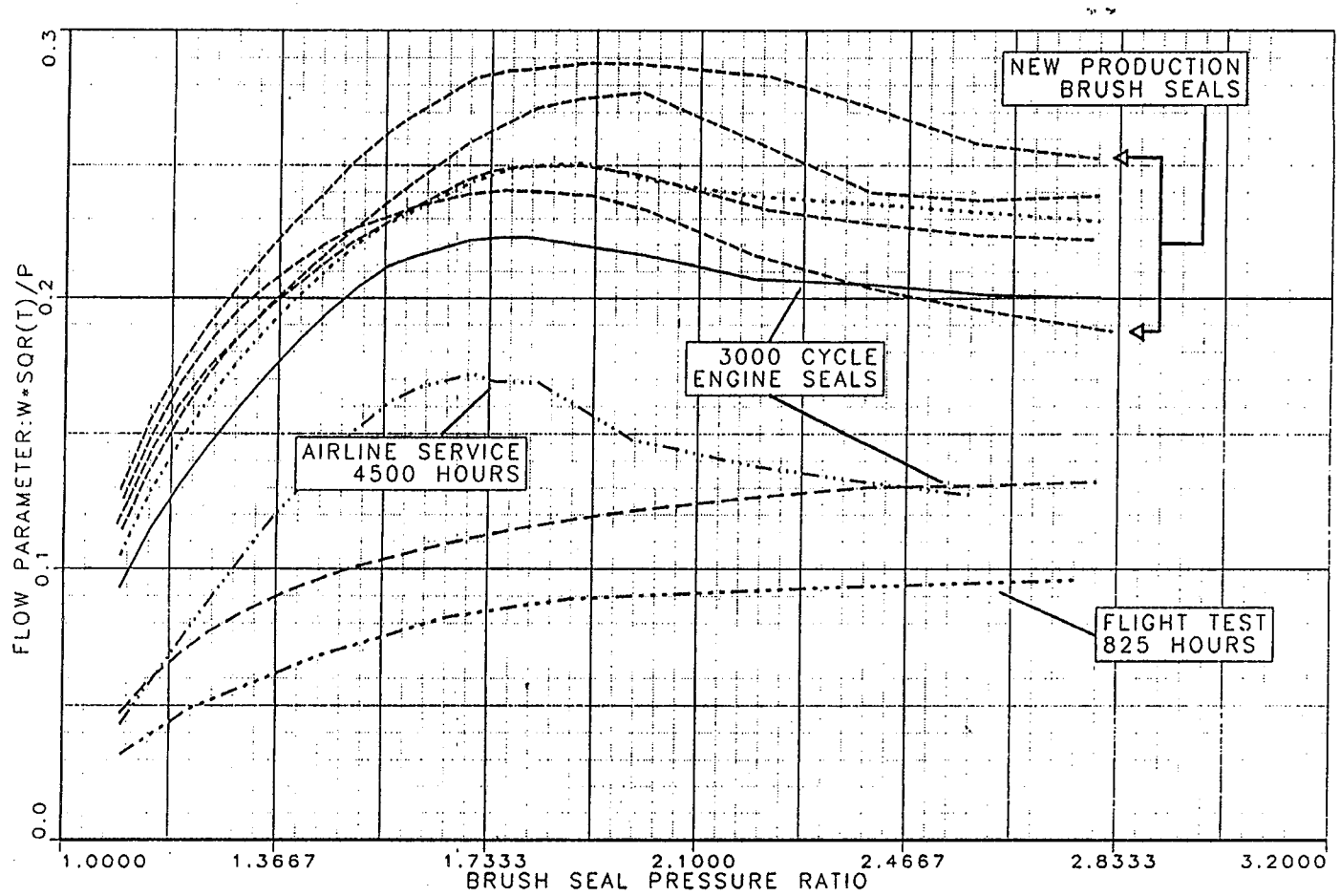

High Pressure Compressor exit brush seal leakage is comparable to new seals

FM95004-8
9/13/96

BRUSH SEAL ENGINE DEVELOPMENT AND SERVICE EXPERIENCE

	Development Certification Time	Entry into Service	Revenue Flight Hours to Date
PW4168	4,500 Hrs./10,500 cycles	12/94	182,000
PW4084 PW4090	8,000 Hrs/23,500 cycles	PW4084 - 6/95 PW4090 - 3/97	90,000

THE PW6000 WILL USE BOTH STATIC AND DYNAMIC BRUSH SEALS

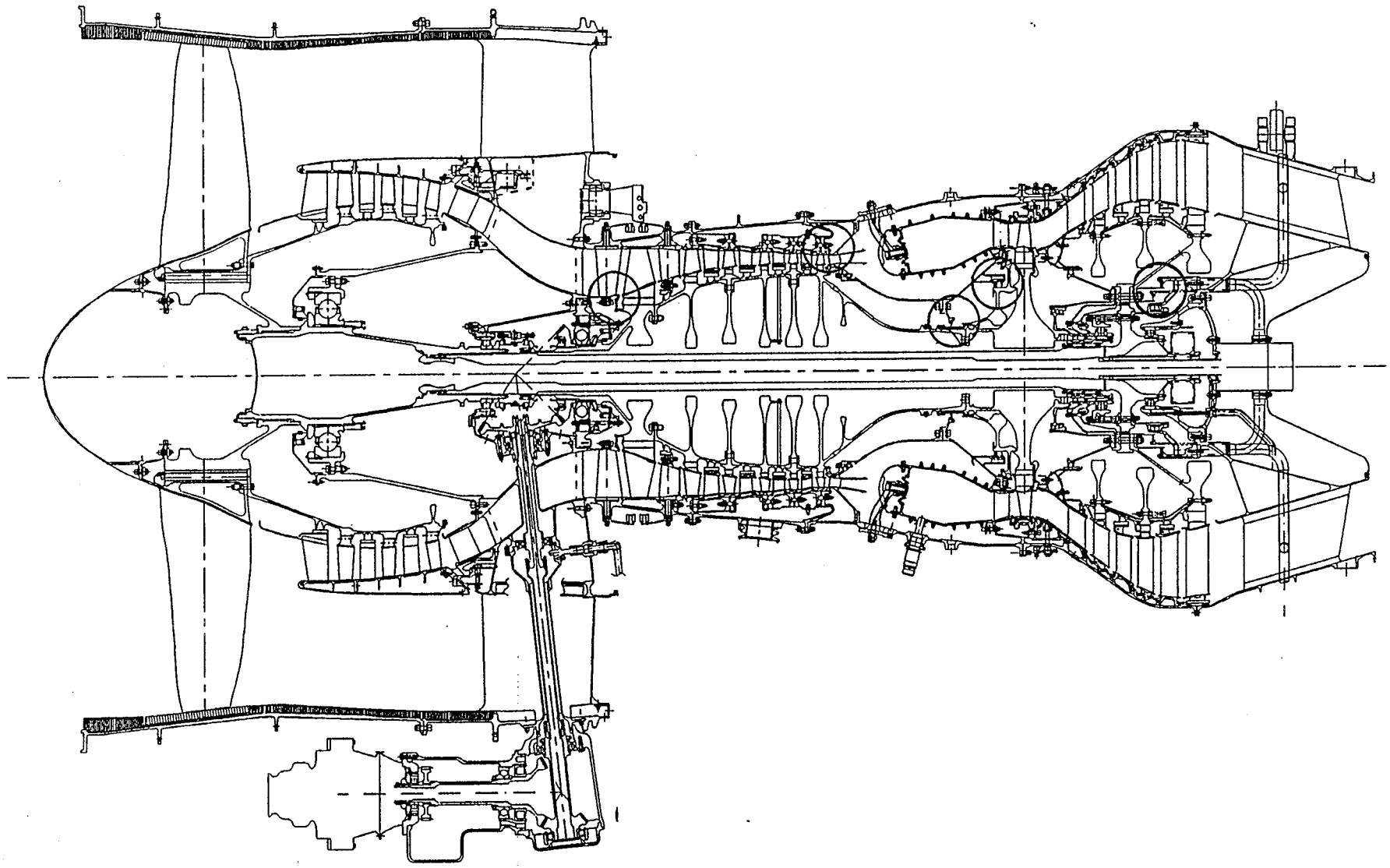

PW6000 HPC FRONT HUB BRUSH SEAL

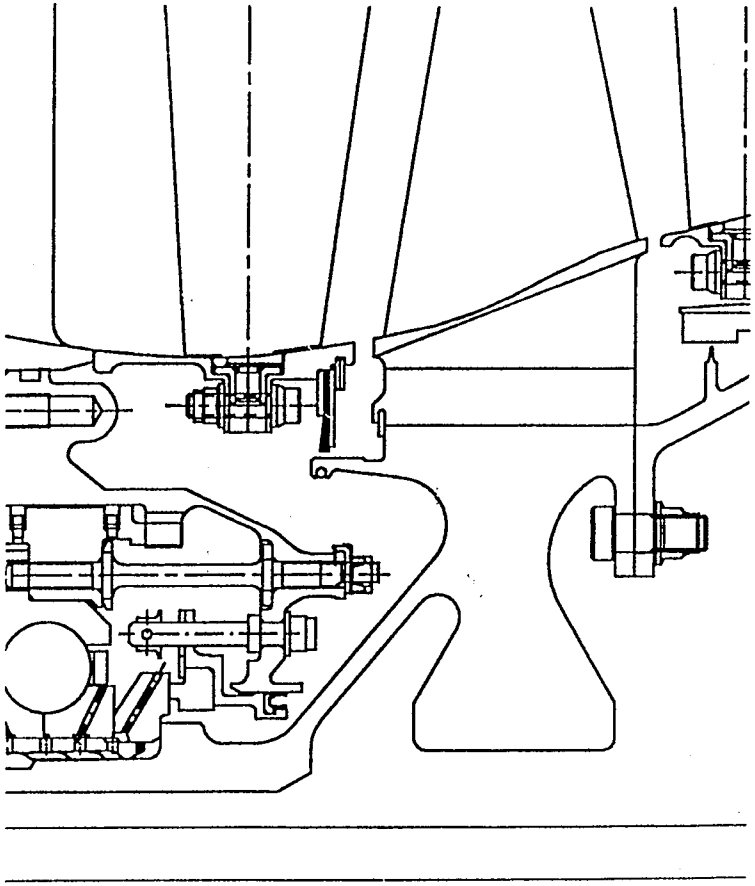

PW6000 HPC REAR CASE BRUSH SEAL

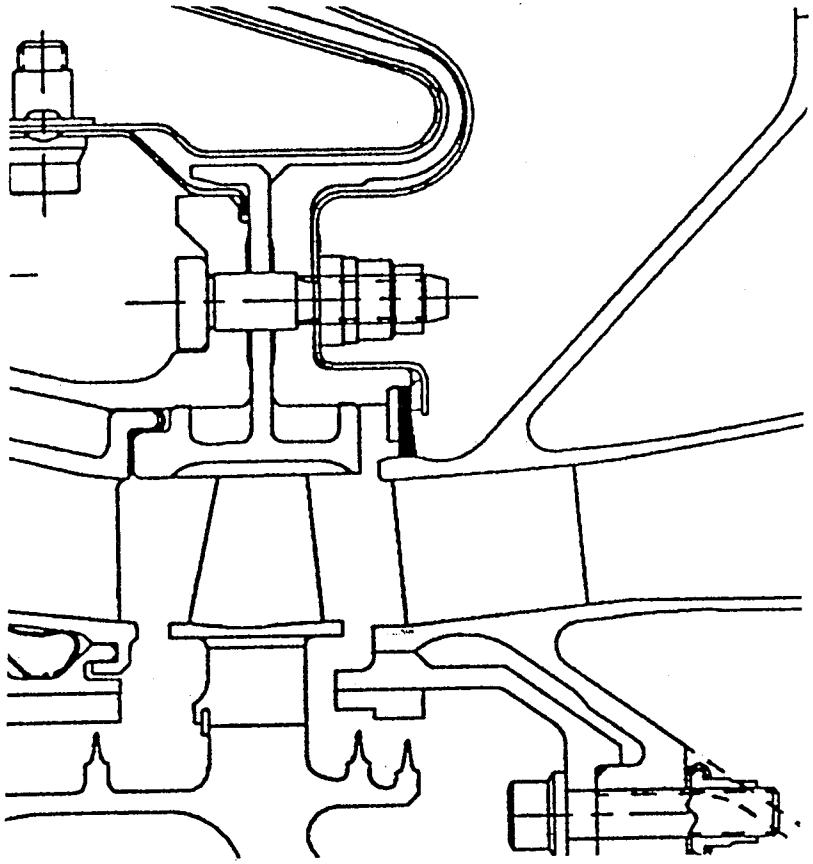

PW6000 HPC REAR HUB AND TOBI SEALS

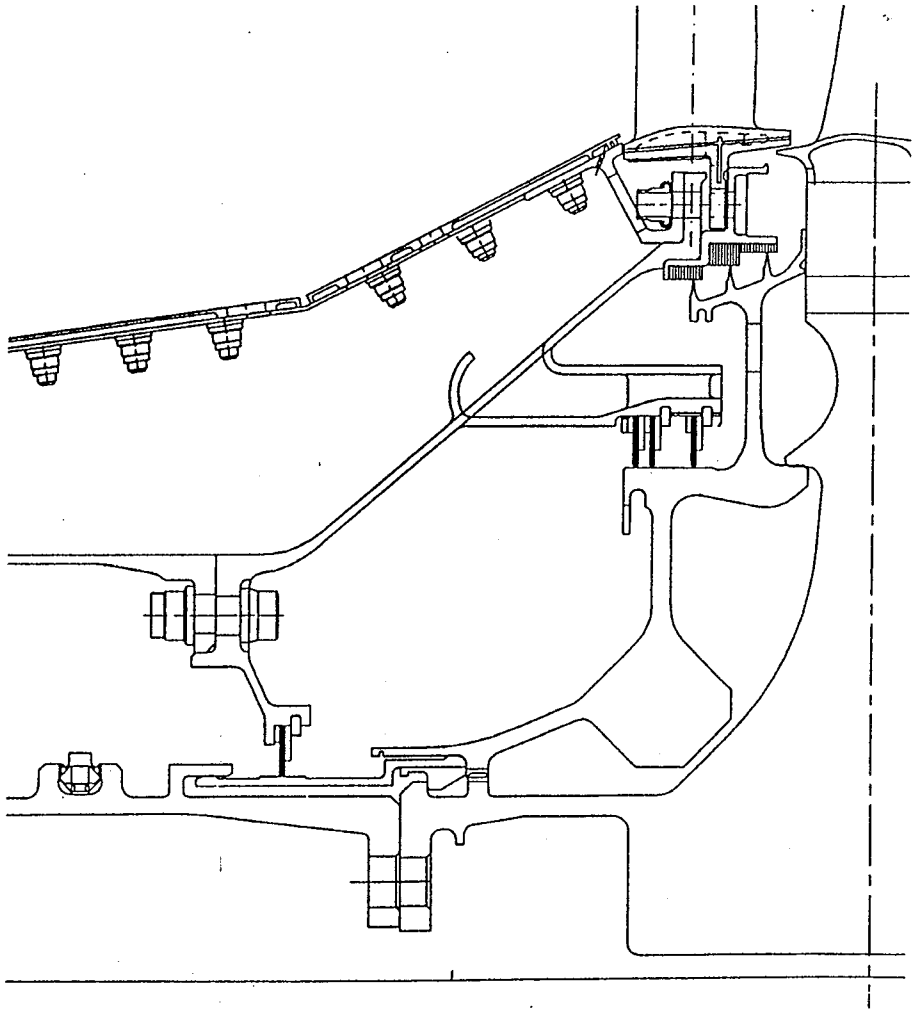
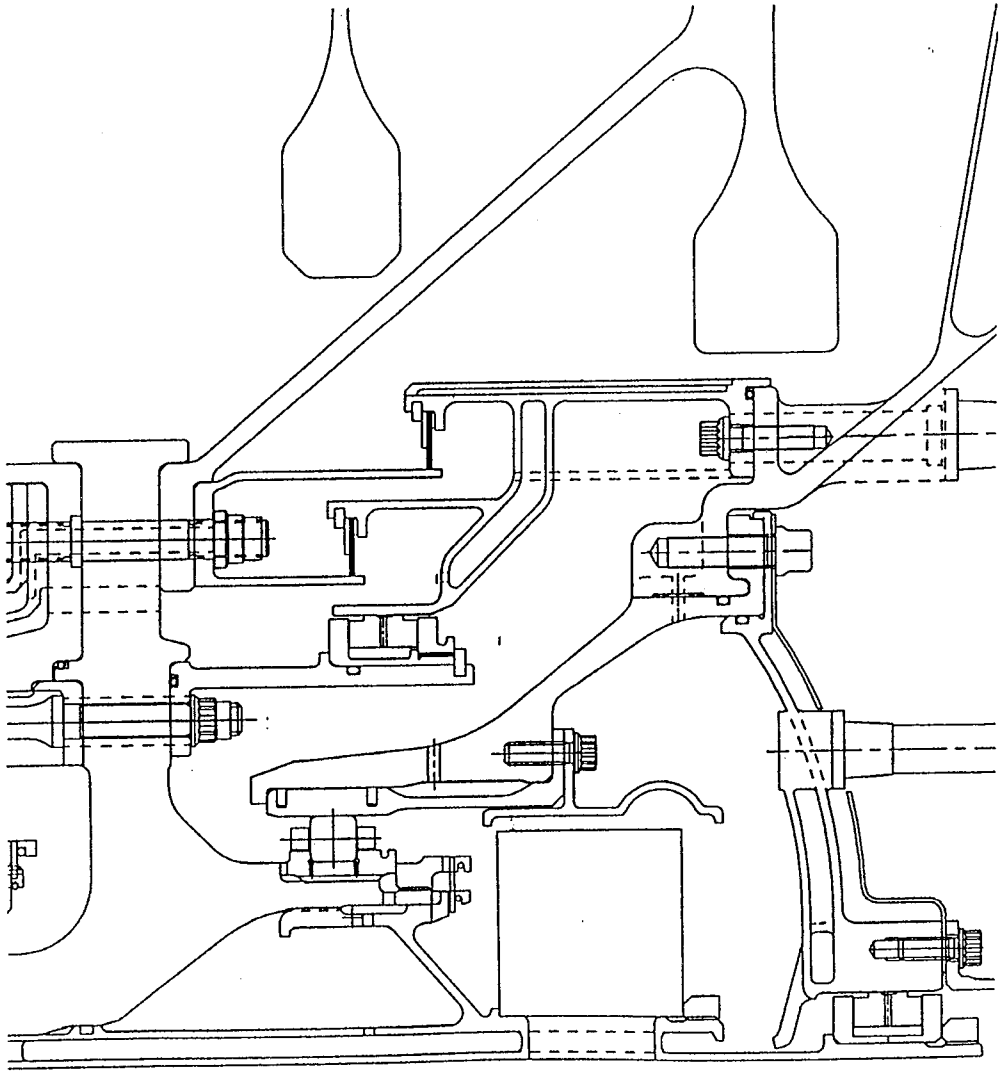
PW6000 REAR BEARING COMPARTMENT SEALS